POWERMAN
EST 1984

User Manual

PM11- HF01 & HF03

Online UPS

17 Honeydew Business Park, 1503 Citrus Street, Laser Park Honeydew
Tel: 0861 444 445 Email: sales@powerman.co.za Web: www.powerman.co.za

Important Safety Instructions

Save these instructions

This manual contains important safety instructions. Read all safety and operating instructions before operating the uninterruptible power systems (UPS). Adhere to all warnings on the unit and in this manual. Follow all operating and user instructions. This equipment can be operated by individuals without previous training.

Maximum load must not exceed that shown on the UPS rating label. The UPS is designed for data processing equipment. If uncertain, consult your dealer or local representative.

The 1-3kVA@200/208/220/230/240VAC is designed for use with a three-wire input (L,N,G).

WARNING

The battery can present a risk of electrical shock and high short circuit current. Following precautions should be observed before replacing the battery.

- Wear rubber gloves and boots.
- Remove rings, watches and other metal objects.
- Use tools with insulated handles.
- Do not lay tools or other metal objects on the batteries.
- If the battery is damaged in any way or shows signs of leakage, contact your local representative immediately.
- Do not dispose of batteries in a fire. The batteries may explode.
- Handle, transport and recycle batteries in accordance with local representative.

WARNING

Although the UPS has been designed and manufactured to ensure personal safety, improper use can result in electrical shock or fire. To ensure safety, observe the following precautions:

- Turn off and unplug the UPS before cleaning it.
- Clean the UPS with a dry cloth. Do not use liquid or aerosol cleaners.
- Never block or insert any objects into the ventilation holes or other openings of the UPS.
- Do not place the UPS power cord where it might be damaged.

CONTENTS

Important Safety Instructions ..... *I*

Contents ..... *II*

1.Electromagnetic Compatibility *1*

2. Introduction *2*

3.System Description *5*

3.1 Transient Voltage Surge Suppression (TVSS) and EMI/FRI Filters 5

3.2 Rectifier/Power Factor Correction (PFC) Circuit 5

3.3 Inverter 5

3.4 Battery Charger 5

3.5 DC-to-DC Converter 6

3.6 Battery 6

3.7 Dynamic Bypass 6

4. Product Specification and performance *7*

4.1 Model Description 7

4.2 Product Specification and Performance 7

5. Installation *9*

5.1 Unpacking and Inspection 9

5.2 Mechanical Installation 9

5.2.1 Notes for installation 9

5.2.2 Tower Installation 9

5.2.3 Rack Installation 12

5.3 Operating procedure for connecting the long backup time model UPS with the external battery 13

6. Controls and Indicators *15*

6.1 Operation and Display Panel 15

6.2 Audible Alarm.....18

7. Operation *19*

7.1 Operation Mode.....19

8. Battery Maintenance.....*20*

8.1 Battery maintenance.....20

8.2 Replacing Internal Battery Pack.....20

9. Notes for battery disposal and replacement procedures *24*

9.1 Battery Disposal 24

9.2 Battery Replacement Procedures.....24

10. Trouble shooting.....*25*

10.1 Checking UPS status 25

10.2 Adjust the factors caused the problem 25

Annex A. Intelligent Slot.....*29*

Annex B. EPO *30*

Annex C. Rated Parameters Setting.....*29*

Annex D. Battery Kit Assembly (option) *34*

1.Electromagnetic Compatibility

*** Safety**	
IEC/EN 62040-1-1	
*** EMI**	
Conducted Emission.....IEC/EN 62040-2	Class A
Radiated Emission.....IEC/EN 62040-2	Class A
***EMS**	
ESD.....IEC/EN 61000-4-2	Level 4
RS.....IEC/EN 61000-4-3	Level 3
EFT.....IEC/EN 61000-4-4	Level 4
SURGE.....IEC/EN 61000-4-5	Level 4
Low Frequency Signals.....:IEC/EN 61000-2-2	
Warning: This is a product for commercial and industrial application in the second environment-installation restrictions or additional measures may be needed to prevent disturbances.	

NOTICE：

This is a product for restricted sales distribution to informed partners. Installation restrictions or additional measures may be needed to prevent radio interference.

Operated the UPS in an indoor enviroment only in an ambient temperature range of 0-40°C(32-104°F). Install it in a clean environment, free from moisture, flammable liquids, gases and corrosive substance.

This UPS contains no user-serviceable parts except the internal battery pack. The UPS on/off push buttons do not electrically isolate internal parts. Under no circumstance attempt to gain access internally, due to the risk of electric shock or burn.

Do not continue to use the UPS if the panel indications are not in accordance with these operating instructions or the UPS performance alters in use. Refer all fault to your dealer.

Servicing of batteries should be performed or supervised by personnel knowledgeable of batteries and the precautions. Keep unauthorized personnel away from the batteries. Proper disposal of batteries is required. Refer to your local laws and regulations for disposal requirement.

DO NOT CONNECT equipment that could overload the UPS or demand DC current from the UPS, for example: electric drills, vacuum cleaners, laser printers, hair dryer or any appliance using half-wave rectification.

Storing magnetic media on top of the UPS may result in data loss or corruption.

Turn off and isolate the UPS before cleaning it. Use only a soft cloth, never liquid or aerosol cleaners.

2. Introduction

Congratulations on your choice of the uninterruptible power system(UPS), the UPS comes in nominal power ratings of 1000VA,2000VA and 3000VA. It is designed to provide conditioned power to microcomputers and other sensitive electronic equipment.

When it is generated, alternating current is clean and stable. However, during transmission and distribution it may be subject to voltage sags, spikes and complete power failure that may interrupt computer operations, cause data loss and even damage equipment. The UPS protects equipment from these disturbances.

The UPS is a compact, on-line UPS. An on-line UPS continuously conditions and regulates its output voltage, whether utility power is present or not. It supplies connected equipment with clean sinewave power. Sensitive electronic equipment operates best from sinewave power.

For ease of use, the UPS features a LCD display to indicate all information for UPS, and provide kinds of function buttons.

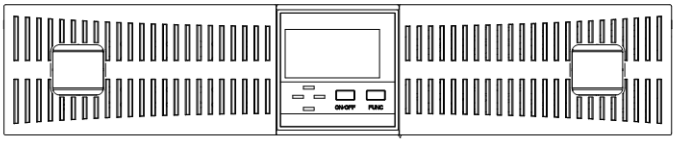

1KS / 1KL / 2KL / 3KL

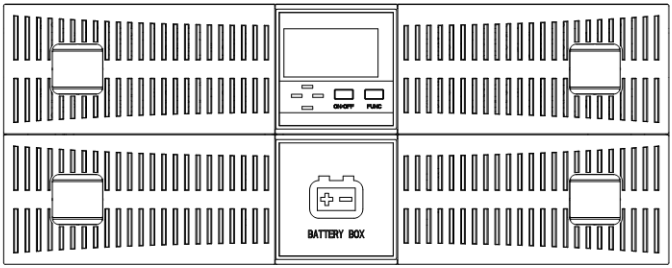

2KS / 3KS

Fig.1 Front View

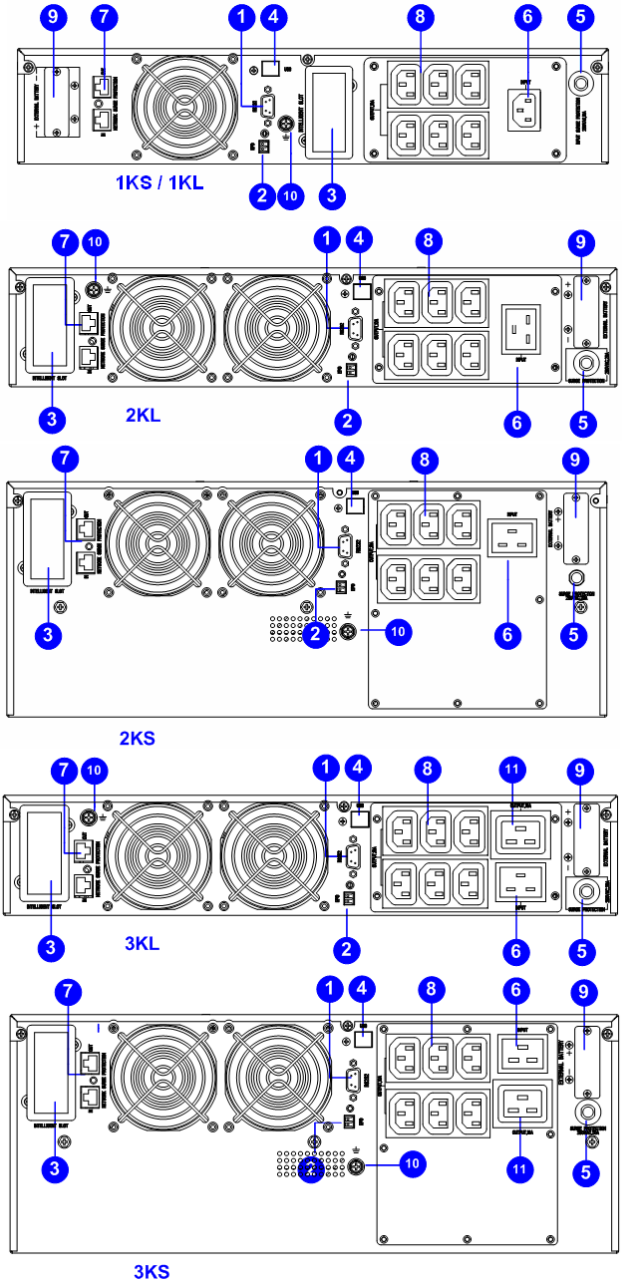

Fig.2 Rear View

❶	RS-232 communication port. DB9 type.
❷	EPO. Short to activate.
❸	Intelligent slot
❹	USB port. B type.
❺	Input surge protection slot.
❻	Input socket. 1KVA: IEC C14, 2K/3K: IEC C20
❼	Network surge protection.
❽	Output Socket IEC C13
❾	External battery port. Optional for standard model.
❿	Battery ground
⓫	Output Socket IEC C19

In addition, in view of the long backup time requirements, Specially designed the battery pack, the diagram below:

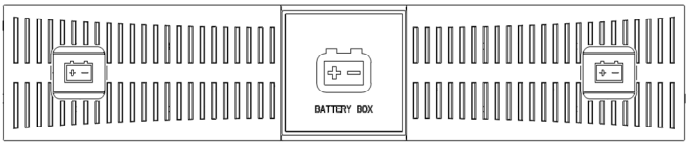

Battery Pack

Fig.3-1Front View of Battery pack

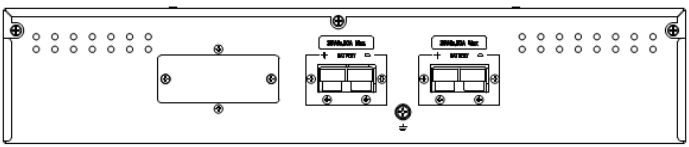

Fig.3-2 Rear View of Battery pack

3. System Description

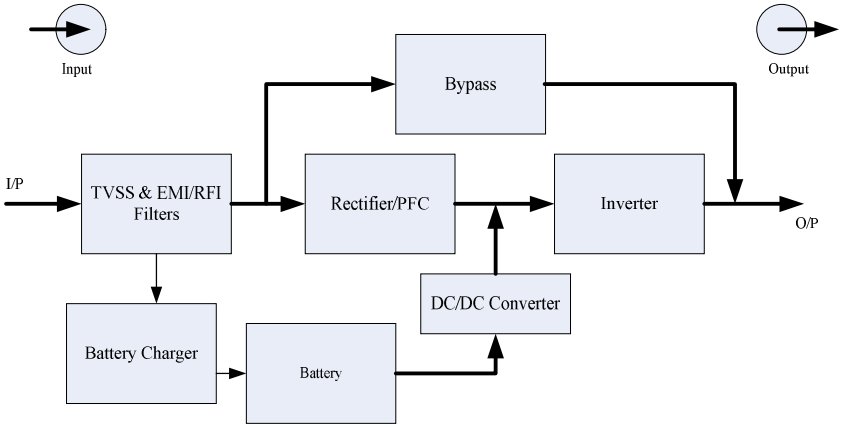

3.1 Transient Voltage Surge Suppression (TVSS) and EMI/FRI Filters

These UPS components provide surge protection and filter both electromagnetic interference (EMI) and radio frequency interference (RFI). They minimize any surge or interference present in the utility line and keep the sensitive equipment protected.

3.2 Rectifier/Power Factor Correction (PFC) Circuit

In normal operation, the rectifier/power factor correction (PFC) circuit converts utility AC power to regulated DC power for use by the inverter while ensuring that the waveform of the input current used by the UPS is near ideal. Extracting this sinewave input current achieves two objects:

- The utility power is used as efficiency as possible by the UPS.
- The amount of distortion reflected on the utility is reduced.

This results in cleaner power being available to other devices in the building not being protected by the UPS.

3.3 Inverter

In normal operation, the inverter utilize the DC output of the power factor correction circuit and inverters it into precise, regulated sinewave AC power. Upon a utility power failure, the inverter receives its required energy from the battery through the DC-to-DC converter. In both modes of operation, the UPS inverter is on-line and continuously generating clean, precise, regulated AC output power.

3.4 Battery Charger

The battery charger utilizes energy from the utility power and precisely regulates it to continuously float charge the batteries. The batteries are being charged whenever the UPS is

connected to utility power.

3.5 DC-to-DC Converter

The DC-to-DC converter utilizes energy from the battery system and raises the DC voltage to the optimum operating voltage for the inverter. The converter includes boost circuit which is also used as PFC.

3.6 Battery

The standard model include value-regulated, non-spillable, lead acid batteries inside. To maintain battery design life, operate the UPS in an ambient temperature of 14-25°C.

3.7 Dynamic Bypass

The UPS provides an alternate path for utility power to the connected load in the unlikely event of a UPS malfunction. Should the UPS have an overload, over temperature or any other failure condition, the UPS automatically transfers the connected load to bypass. Bypass operation is indicated by an audible alarm and illuminated amber Bypass LED.

NOTICE： *The bypass power path does NOT protect the connected equipment from disturbances in the utility supply.*

4. Product Specification and performance

4.1 Model Description

This manual is applicable to the following models:

Model No.	Type
11xxS	Standard model
11xxL	Long backup model

"L" Model: Long backup time, "S" Model: Standard backup time

4.2 Product Specification and Performance

1. General Specification

Model		1K		2K		3K	
Power Rating		1000VA/ 800W	1000VA/ 900W	2000VA/ 1600W	2000VA/ 1800W	3000VA/ 2400W	3000VA/ 2700W
Frequency (Hz)		50/60		50/60		50/60	
Input	Voltage	110Vac~288Vac					
	Current	5.5A max.		11A max		16A max	
Battery	Voltage	24VDC	36VDC	48VDC	72VDC	72VDC	96VDC
	Numbers	2	3	4	6	6	8
	Current	50A max	35A max	50A max	35A max	50A max	37A max
Output	Voltage	200V/208V/220V/230V/240V					
	Current	5/4.8/4.5/4.3/4.2A		10/9.6/9/8.6/8.4A		15/14.4/13.5/12.9/12.6A	
Dimension (WxDxH) mm		438*426*86（L/S）		438*477*86（L） 438*477*173（S）			
Weight (kg)	Standard	11.5	13.5	21	25	27	31
	Long	7		8		9.5	

2. Electrical Performance

Input			
Model	Voltage	Frequency	Power Factor
1-3KVA	Single-phase	40-70Hz	>0.98(Full load)

Output					
Voltage Regulation	Power Factor	Frequency tolerance.	Distortion	Overload capacity	Crest ratio
±1%	0.9 lag	±0.5% of normal	THD<1%@Full Linear Load THD<6%@Full nonlinear load	130% load: transfers to Bypass mode after 1 minutes 150% load: transfers to Bypass mode after 0.5 minute	3:1 maximum

3. Operating Environment

Temperature	Humidity	Altitude	Storage temperature
0°C-40°C	<95%	<1000m	-20°C-70°C

NOTICE：*If the UPS is installed or used in a place where the altitude is above than **1000m**, the output power must be derated in use, please refer to the following:*

Altitude (M)	1000	1500	2000	2500	3000	3500	4000	4500	5000
Derating Power	100%	95%	91%	86%	82%	78%	74%	70%	67%

5. Installation

NOTICE： *UPS operation in sustained temperature outside the range of 14-25°C (59°-77°F) reduces battery life.*

5.1 Unpacking and Inspection

1) Unpack the packaging and check the package contents. The shipping package contains:
   - 1 UPS
   - 1 user manual
   - 1 Input Cable
   - 1 RS232 Cable
   - 2 Bracket Ear
   - 1 Battery Cable (For Long backup model only)

2) Inspect the appearance of the UPS to see if there is any damage during transportation. Do not turn on the unit and notify the carrier and dealer immediately if there is any damage or lacking of some parts.

5.2 Mechanical Installation

Two installation modes are available: tower installation and rack installation, depending on available space and use considerations. You can select an appropriate installation mode according to the actual conditions.

5.2.1 Notes for installation

1) The UPS must be installed in a location with good ventilation, far away from water, inflammable gas and corrosive agents.
2) Ensure the air vents on the front and rear of the UPS are not blocked so as to ensure good ventilation.
3) Condensation to water drops may occur if the UPS is unpacked in a very low temperature environment. In this case it is necessary to wait until the UPS is fully dried inside out before proceeding installation and use. Otherwise there are hazards of electric shock.

5.2.2 Tower Installation

Various installation configurations are available: single UPS, single UPS with single or multiple battery cabinets. Their installation methods are all the same.

The installation procedures are as follows:

Step 1: Take out the support bases from the accessories. Their appearances are shown in Fig.4-1.

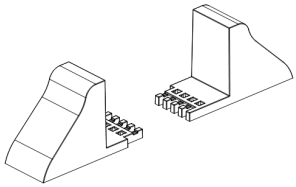

Fig.4-1 Support bases

Step 2: If optional external battery cabinets are connected to the UPS to provide additional battery run time, assemble the spacers and the support bases, as shown in Fig.4-2.

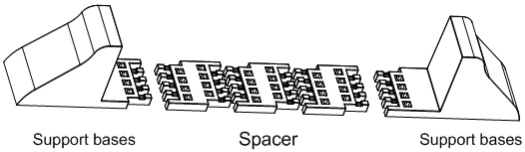

Fig.4-2 Installing support bases with spacers

Step 3: Adjust the direction of UPS operation and display panel and LOGO.

1. Remove the front plastic bezel cover gently, as shown in Fig.4-3.

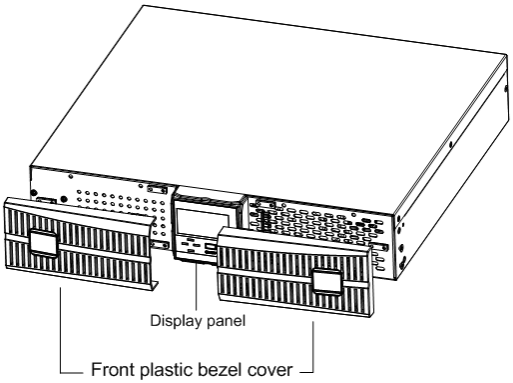

Fig.4-3 Removing the front plastic bezel cover

2. Pull the operation and display panel gently, rotate it 90 degrees clockwise and snap it back into position, as shown in Fig.4-4

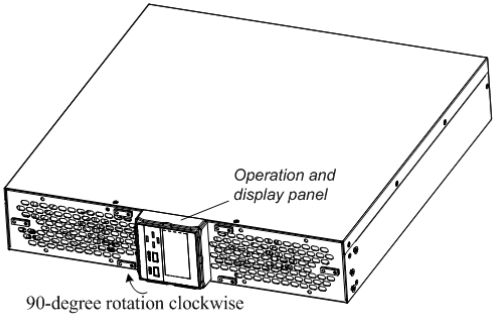

Fig.4-4 Rotating the operation and display panel

3. Pull the LOGO on the front plastic bezel cover gently, rotate it 90 degrees clockwise and snap it back into position. After rotation, the front plastic bezel cover is shown in Fig.4-5.

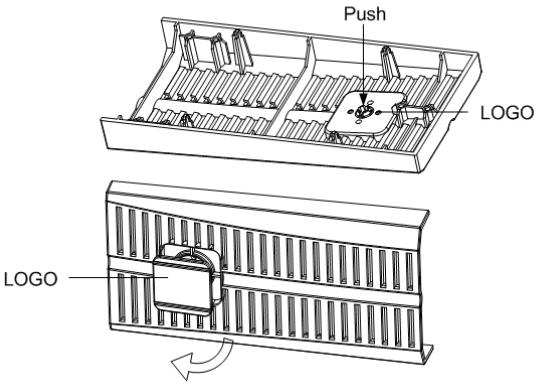

Fig.4-5 Rotate it 90 degrees clockwise and snap it back into position

4. Restore the front plastic bezel cover to the UPS. At this point, the UPS operation and display panel and LOGO have been rotated 90 degrees clockwise, which provides upright viewing for users.

Step 4: Place the UPS (and battery cabinet) on the support bases. Each UPS needs two pairs of support bases to install, as shown in Fig.4-6.

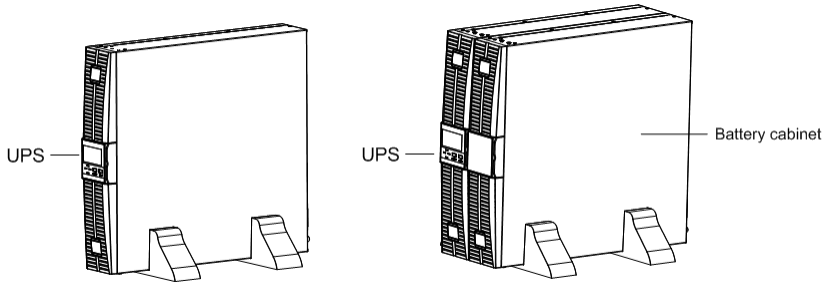

Fig.4-6 Tower installation

5.2.3 Rack Installation

1. Various installation configurations are available: single UPS, single UPS with single or multiple-battery. Their installation methods are all the same.
2. Because battery cabinets are too heavy, they must be installed first, and two or more installation personnel are required to install them at the same time. Please install them from bottom to top.

Rack installation: fix the UPS and battery cabinet onto the rack through brackets.

Installation method:

1. Take out two brackets and six M4 × 10 screws from the accessories, and fix the brackets onto the UPS using the screws through installation hole, as shown in Fig.4-7.

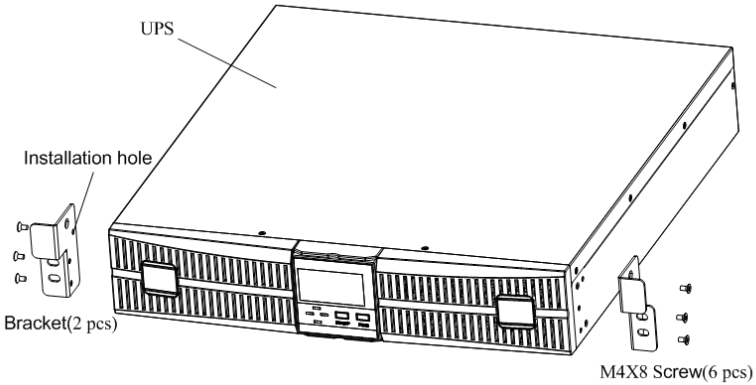

Fig.4-7 Installing brackets

2. Place the UPS onto the guide rail in the rack, and push it completely into the rack along the guide rail (it is prohibited to move the UPS through the brackets). And fix the UPSt onto the rack using the screws through installation hole on the bracket, as shown in Fig.4-8.

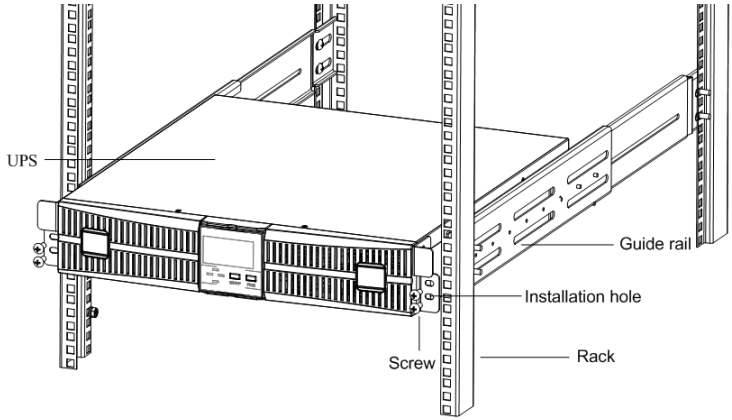

Fig.4-8 Installing UPS

5.3 Operating procedure for connecting the long backup time model UPS with the external battery

Notice: Please connect the external battery at least 40AH while the charge current is 8A, at least 20AH for 4A.otherwise may cause damage to the battery.

1. The nominal DC voltage of external battery pack is 24VDC/1kVA,36VDC/1kVA, 48VDC/2kVA, 72VDC/2kVA, 72VDC/3kVA, 96VDC/3kVA. Connect in series the batteries of the pack to ensure proper battery voltage. To achieve longer backup time, it is possible to connect multi-battery packs, but the principle of “same voltage, same type” should be strictly followed.

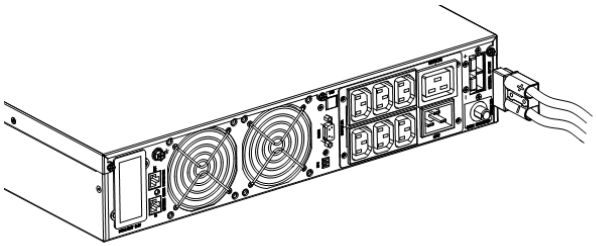

Fig.4-9 Battery terminal connection

2. Take out battery cable delivered with the UPS. One end of battery cable is a plug and the other end has 2 open wires.
3. Connect the RED wire to the “+” terminal of the battery. Connect the BLACK wire to the “-“ terminal of the battery.

Notice: *DO NOT connect the battery plug to the battery socket of UPS first, otherwise, it may cause electric shock.*

4. Connect the external battery plug to the battery socket on the rear panel.

6. Controls and Indicators

6.1 Operation and Display Panel

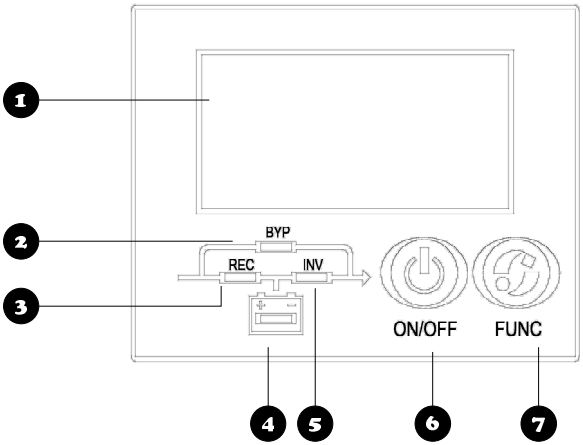

Fig.5 Display Panel

Description of Panel

Controls	Description
6 ON/OFF	1.Press ON/OFF to start UPS when utility is normal **NOTE** *It only bases on default setting(manual start)* 2.Press ON/OFF to start from battery directly when there is no main input, press again to start UPS upon buzzer alarms 3.Press ON/OFF to shutdown inverter when UPS is in normal mode. 4.Press ON/OFF to shutdown UPS completely when UPS is in battery mode 5.Press ON/OFF to ensure the rated parameter setting
7 FUNC	1.Press FUNC button to transfer in different menus 2.Press FUNC button for 2.5 seconds to mute off 3.Press FUNC and ON/OFF together for 2.5 seconds to set rated parameters when only power supply is on
Indicators	**Description**

3 REC	Rectifier indicator: green--rectifier is normal, green flicker--rectifier is starting, dark—rectifier is not working
5 Inv	Inv indicator: green--inverter is normal green flicker--inverter is starting or tracking with bypass(ECO) dark—inverter is not working
2 BYP	Bypass indicator: yellow—bypass is normal yellow flicker—yellow flicker—The utility power input is ok, But not start the ups. dark—bypass is not working
4 BAT	Battery indicator: yellow—battery discharge or charged yellow flicker—battery is not connected, battery is low or charger is failure dark—battery is connected

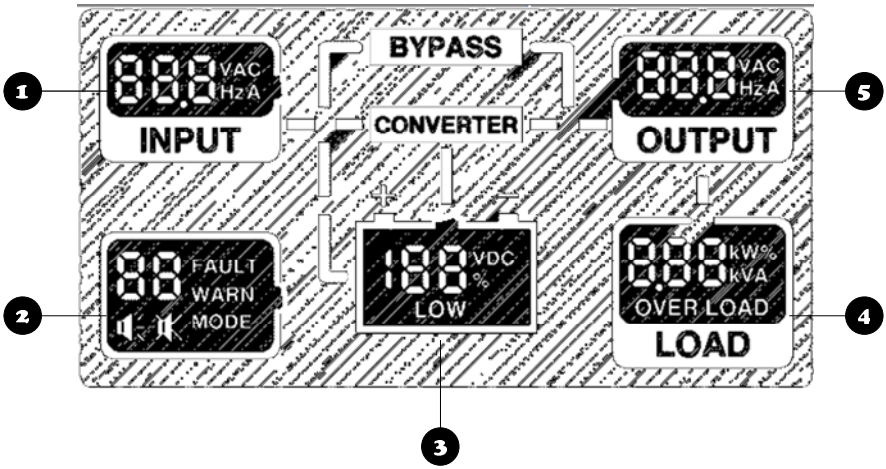

Fig 6. LCD Main Menu

Description of Main Menu

Display	Function	Submenu
1	Input information	Input voltage(VAC), Input frequency(Hz), Input current(A)
2	Warn information	Fault code(FAULT), Warn code(WARN), working mode(First number: n-normal mode, E-ECO mode. Second number: rated voltage and frequency 0-200V/50Hz, 1-200V/60Hz, 2-208V/50Hz, 3-208V/60Hz, 4-220V/50Hz, 4-220V/60Hz, 6-230V/50Hz, 7-230V/60Hz, 8-240V/50Hz, 9-240V/60Hz) mute on( ), mute off( )
3	Battery information	Battery voltage(VDC), Capacity(%) if needed, Firmware version, Battery low warn(LOW) UPS ID(1-9) in setting mode
4	Load information	Load percent(%) Active load(kW) Apparent load(kVA) Protocol code in setting mode
5	Output information	Output voltage(VAC) Output frequency(Hz) Output current(A)

Note: *Press "FUNC" button to see different information.*

6.2 Audible Alarm

No.	Condition	Alarm
1	Battery discharge	Sounding every 2 minutes
2	Low battery	Sounding every 6 seconds
3	Overload	Continuous beeping
4	Input voltage abnormal	Sounding every 2 minutes

7. Operation

7.1 Operation Mode

1. Turn on the UPS in normal mode

1) After you make sure that the power supply connection is correct, and then close the battery breaker (this step only for long backup time model), after that turn on the utility power. At this time the fans rotate, and LCD is on
2) Press ON/OFF for about 1 second, REC led will green flicker. Inverter will start and the INV green led flickers when REC led is green

   NOTE

   In some application, UPS is set to start automatically, there will be something different.
3) About several seconds, the UPS turn into normal Line mode. If the utility power is abnormal, the UPS will operate in Battery mode without output interruption of the UPS.

2. Turn on the UPS from battery without utility power

1) After you make sure that the breaker of the battery pack is in the “ON” position (this step only for long backup time model), press the ON/OFF button once to power on the LCD, then press ON/OFF button again for 1 second when the buzzer alarms
2) A few seconds later, the UPS turns into Battery mode, and inverter feed the load.

3. Turn off the UPS in normal mode

1) Press ON/OFF button in condition of normal mode
2) Turn off utility power
3) If it’s a long backup model, open the battery breaker to turn off UPS completely. If it’s an internal battery model, the UPS will shutdown completely after several seconds.

4. Turn off the UPS in battery mode

1) To power off the UPS by pressing the ON/OFF button continuously for more than 1 second
2) When being powered off, the UPS will turn into No Output mode. Finally not any display is shown on the display panel and no voltage is available from the UPS output.

NOTICE：*Please turn off the connected loads before turning on the UPS and turn on the loads one by one after the UPS is working in INV mode. Turn off all of the connected loads before turning off the UPS.*

8. Battery Maintenance

8.1 Battery maintenance

1-3KVA UPS only requires minimal maintenance. The batteries used for standard models are value regulated, sealed lead-acid, maintenance free battery. When being connected to the utility power, whether the UPS is turned on or not, the UPS keeps charging the batteries and also offers the protective function of overcharging and over-discharging.

- The UPS should be charged once every 4 to 6 months if it has not been used for a long time.
- In the regions of hot climates, the battery should be charged and discharged every 2 months. The standard charging time should be at least 12 hours.
- Under normal conditions, the battery life lasts 3 to 5 years. In case if the battery is found in bad condition, earlier replacement should be made.
- Battery replacement should be performed by qualified personnel.
- Replace batteries with the same number and same type of batteries.
- Do not replace the battery individually. All the batteries should be replaced at the same time following the instructions of the battery supplier.

8.2 Replacing Internal Battery Pack

Battery replacement procedures

Step 1: Gently remove the front plastic bezel cover from the UPS.

Step 2: Loosen and remove the screws on the battery door, as shown in Fig.7-1. Lay the battery door aside for reassembly.

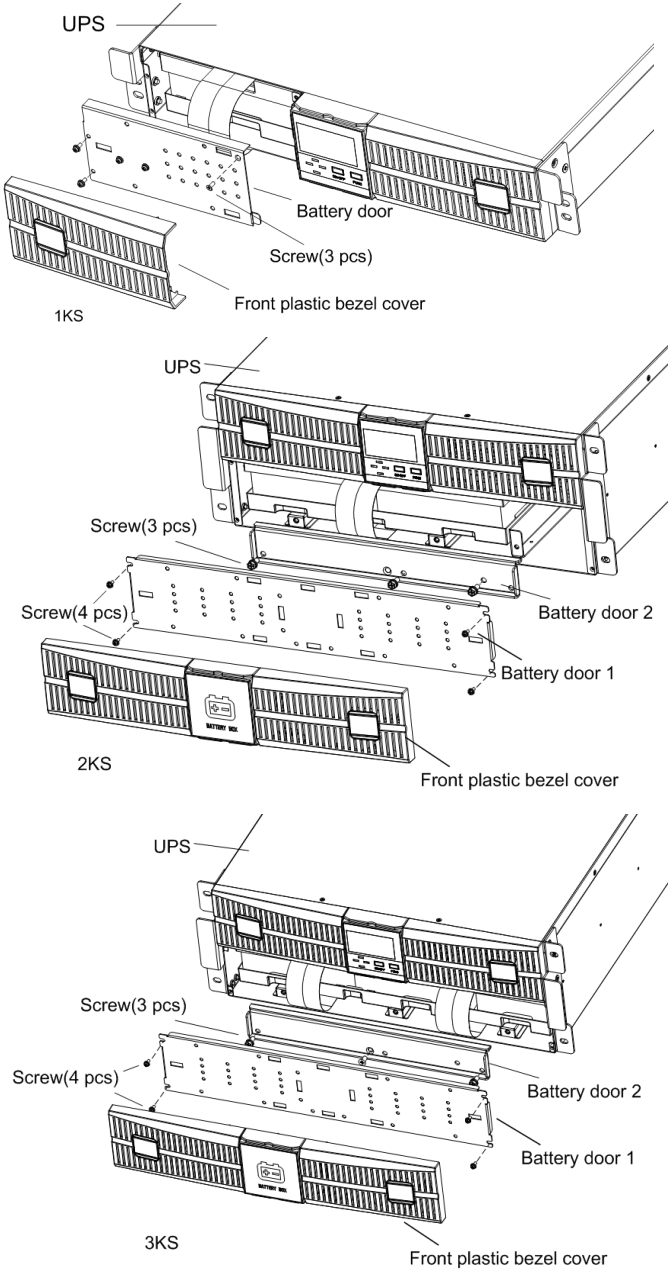

Fig.7-1 Removing the front plastic bezel cover and battery door

Step 3: Gently pull the battery wire out and disconnect battery wires, as shown in Fig.7-2.

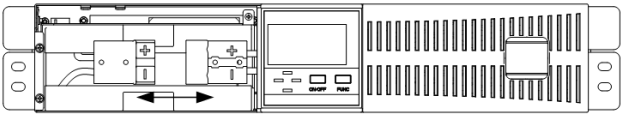

1KS

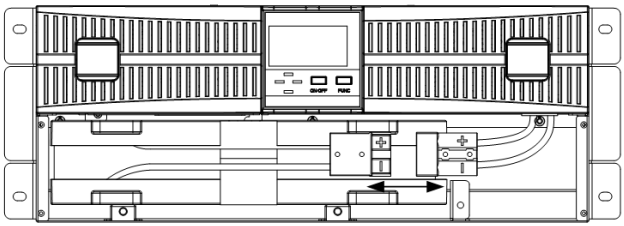

2KS

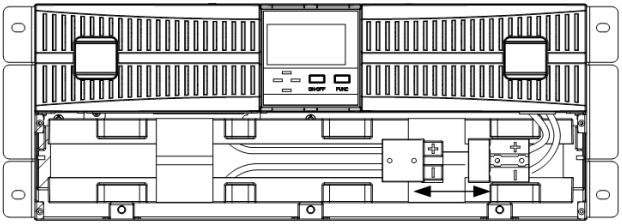

3KS

Fig.8-2 Disconnect battery wires

Step 4: Grasp the battery handle, and pull the internal battery pack out of the UPS, as shown in Fig.7-3.

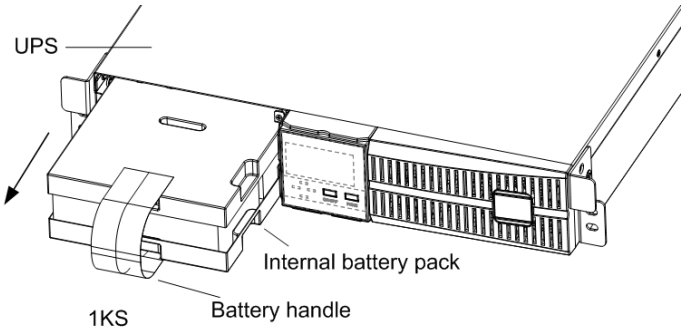

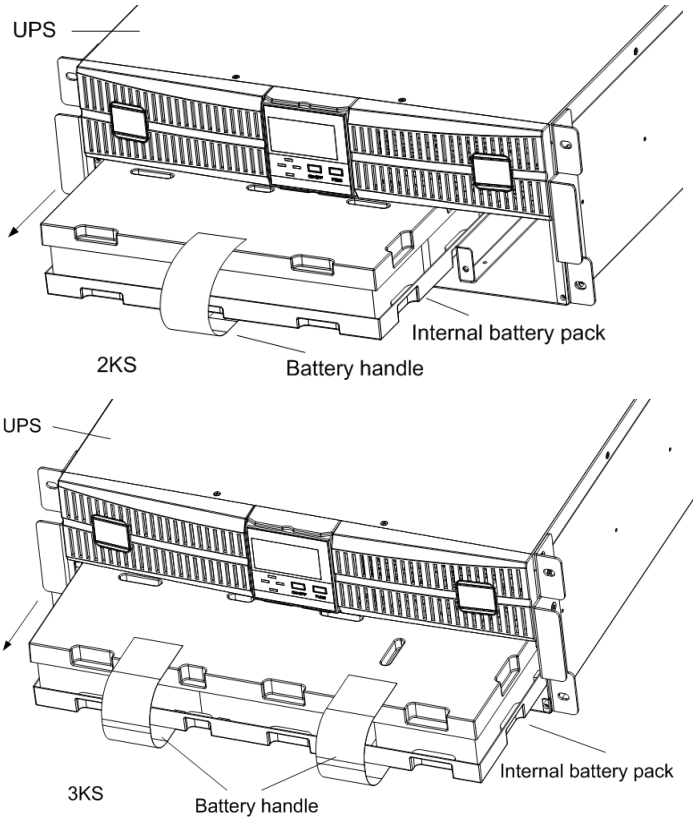

Fig.7-3 Pulling out the internal battery pack

Step 5: Unpack the new internal battery pack. Take care not to destroy the packing. Compare the new and old internal battery pack to make sure they are the same. If so, proceed with Step 6; otherwise stop operation and contact your local dealer.

Step 6: Line up and slide in the new internal battery pack.

Step 7: Reconnect the battery plug and battery receptacle, and gently push the battery wire and internal battery pack back into the UPS.

Step 8: Reattach the front battery door with the three screws.

Step 9: Reattach the front plastic bezel cover to the UPS.

(For battery kit assembly, refer to Annex D)

NOTICE： Do not replace the internal battery pack while the UPS is operating in Battery Mode. This will result in a loss of output power and will drop the connected load. Moreover, it will jeopardize personnel safety！

9. Notes for battery disposal and replacement procedures

9.1 Battery Disposal

1) Before disposing of batteries, remove jewelry, watches and other metal objects.
2) Use rubber gloves and boots, use tools with insulated handles.
3) If it is necessary to replace any connection cables, please purchase the original materials from the authorized distributors or service centers, so as to avoid overheat or spark resulting in fire due to insufficient capacity.
4) Do not dispose of batteries or battery packs in a fire. The batteries may explode.
5) Do not open or mutilate batteries, released electrolyte is highly poisonous and harmful to the skin and eyes.
6) Do not short the positive and negative of the battery electrode, otherwise, it may result in electric shock or fire.
7) Make sure that there is no voltage before touching the batteries. The battery circuit is not isolated from the input potential circuit. There may be hazardous voltage between the battery terminals and the ground.
8) Even though the input breaker is disconnected, the components inside the UPS are still connected with the batteries, and there are potential hazardous voltages. Therefore, before any maintenance and repairs work is carried out, switch off the breaker of the battery pack or disconnect the jumper wire of connecting between the batteries.
9) Batteries contain hazardous voltage and current. Battery maintenance such as the battery replacement must be carried out by qualified personnel who are knowledgeable about batteries. No other persons should handle the batteries

9.2 Battery Replacement Procedures

1) Turn off UPS completely.
2) Remove covers from the UPS.
3) Disconnect the battery wires one by one.
4) Remove metal bars which are used to fasten batteries.
5) Replace batteries one by one.
6) Screw metal bars back to UPS.
7) Connect the battery wires one by one. Take care of electrical shock while connecting the last wire.

10. Trouble shooting

This section describes checking the UPS' status. This section also indicates various UPS symptoms a user may encounter and provides a troubleshooting guide in the event the UPS develops a problem. Use the following information to determine whether external factors caused the problem and how to remedy the situation.

10.1 Checking UPS status

It recommended that checking the UPS operation status every six months.

- Check whether the UPS is faulty: Is the Fault Indicator on? Is the UPS sounding an alarm?
- Check whether the UPS is operating in Bypass mode. Normally, the UPS operates in Normal Mode. If it is operating in Bypass Mode, stop and contact your local representative, or Channel Support.
- Check whether the battery is discharging. When the utility input is normal, the battery should not discharge. If the UPS is operating in Battery Mode, stop and contact your local representative, or Channel Support.

10.2 Adjust the factors caused the problem

When the fault indicator is on, press FUNC button to see the fault code and warn code. Fault and warn codes are listed as following:

Code	Event	Possible cause	Solution
7	Warn: Battery not connected	Battery not connected	Check if battery switch is off or battery cables are disconnected
10	Warn: EPO	Emergency power off	Short the EPO terminal 1&2 to activate EPO
16	Warn: Input voltage abnormal	Utility is failure	/
		Input surge protector opens	If utility is normal but rectifier is not working, reset input surge protector
18	Warn: Line neutral wires reversed/PE not grounded	Input Line and neutral is reversed	Check the polarity of line wire and neutral wire
		PE wire is not connected correctly in UPS	Check if PE on input plug is shorted with UPS rear panel. If not ,contact with distributer or service center. If yes, please check PE wire in input power socket
20	Warn: Bypass	Bypass voltage is out	Check if utility power is indeed out of

	voltage abnormal	of bypass range or is off	range.
24	Warn: Bypass over load	Load is on bypass and is overload	Remove some loads to ensure that total loads is less than 95% of rated capacity
26	Warn: Bypass overload timeout	Load is on bypass and overload. Overload time is longer than the overload capacity of bypass. UPS will shutdown output and loads will loss power.	Remove some loads and restart UPS again. When UPS is working normally, turn on loads one by one.
28	Warn: Bypass frequency is out of synchronous range	Bypass frequency is out of synchronous range.	/
30	Warn: Transfer times over limit in 1 hour	Transfer times between inverter and bypass is over 5 in recent 1 hour. UPS works in bypass mode.	Check if output is overload or some loads are shorted. Remove the failure loads and restart the UPS or wait for starting inverter automatically.
32	Warn: output shorted	Something shorted	Please remove all loads from UPS output. Check if UPS output is shorted. If not, please check all loads.
34	Warn: End of discharge	UPS works in battery mode for long time after utility failure. UPS output will be off until utility power is on.	Please save your data when UPS alarm “utility fail”
47	Fault: Rectifier fault	Bus over voltage, bus unbalance, rectifier starting failure, bus under voltage, input fuse is off	Please contact with distributer or service center.

49	Fault: Inverter fault	Inverter over voltage, inverter under voltage,	Please contact with distributer or service center.
51	Warn: UPS over temperature	Environment temperature is higher than permitted point, ventilation is blocked	Please ensure that nothing blocks ventilation and environmental temp must be 0~40°C
53	Fault: Fan failure	One or more fans are failure, fan wires are loosen	Please contact with distributer or service center
55	Warn: Inverter overload	Loads are on inverter and over the capacity of the UPS	Remove some loads to ensure that total loads is under the capacity of the UPS
57	Warn: Inverter overload timeout	Load is over the capacity of the UPS and timeout, UPS will transfer to bypass mode if bypass is available	Remove some loads to under 95%, UPS will transfer to inverter automatically
65	Warn: Battery low	UPS works in battery and battery voltage is low	Recover input power or save data upon “battery low”
71	Fault: Charger fault	There is no charger output.	Please contact with distributer or service center
72	Warn: input over current	Abnormal large current enter in rectifier.	Please contact with distributer or service center
74	Warn: Manual shutdown	UPS will shutdown output or transfer to bypass mode	/
/	Battery discharge time diminishes	The battery has not been fully charged	Charge the battery for more than 10 hours
		UPS is overload	Check the loads and remove some devices
		Battery aged	Replace the batteries. Please contact with distributer or service center to obtain replacement

			components for batteries.

NOTICE

Please provide the following information when reporting fault UPS:

1) *The UPS model and serial NO.*
2) *The warn and fault code happened*
3) *Detail of fault, include LED indicates, buzzer beeps, power condition, load capacity and configuration of battery(long backup time model)*

Annex A. Intelligent Slot

There are two types of intelligent slot for option: DB9, phoenix terminator.

Max output current for intelligent slot is 1A.

The functions of intelligent slot are listed as fig.8:

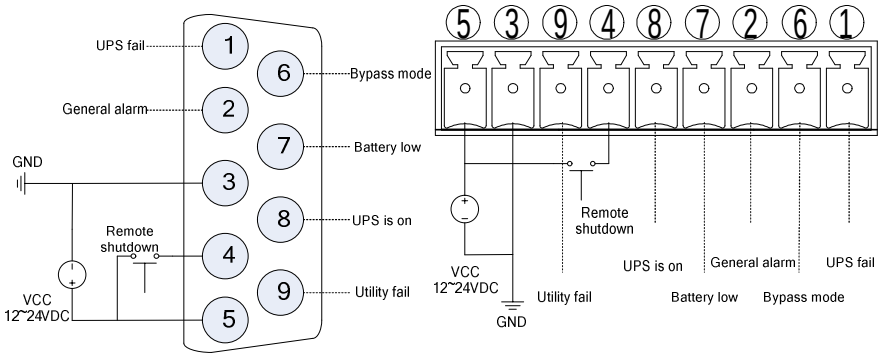

a. DB9 port b. Phoenix port

Fig.8 User wiring diagram of intelligent slot

Description of intelligent slot:

Pin NO.	Function	Description
1	UPS fail	Pin1 to pin5 is NO（Normally Open） if something is failure in UPS. If not, NC（Normally Close）
2	General alarm	Pin2 to pin5 is NO if something is abnormal. If not, NC
3	GND	External power supply GND
4	Remote shutdown	UPS shutdowns rectifier and inverter if utility is normal. UPS shutdowns completely if in battery mode. Close switch to activate.
5	Power supply	External power supply.12VDC~24VDC, Common connection.
6	Bypass mode	Pin6 to pin5 is NC if UPS works in bypass mode. If not, NO.
7	Battery low	Pin7 to pin5 is NO if battery voltage is low. If not, NC.
8	Normal mode	Pin8 to pin5 is NC if UPS works in normal mode. If not, NO.
9	Utility fail	Pin9 to pin5 is NO if utility is failure. If not, NC.

Annex B. EPO

EPO(Emergency Power Off) is optional function to shutdown UPS completely at emergency condition. This function can be activated through a remote contact or a similar switch provided by the user. Normal, EPO terminals without short, When emergencies happen to short the EPO terminals, EPO effect function, UPS close the rectifier ,inverter output immediately,
schematic diagram is as follows:

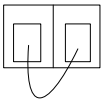

Fig.9 EPO effect function

Annex C. Rated Parameters Setting

Rated parameters of HR11 1-3K UPS can be set from panel. Please set rated parameters in according to the following procedures:

1) Start UPS power supply and ensure that rectifier, inverter, bypass and discharge are not working.
2) Press ON/OFF and FUNC together for 2.5 seconds to enter in setting mode, all LEDs flicker.
3) Voltage setting: press FUNC to change rated voltage. Shown as following:

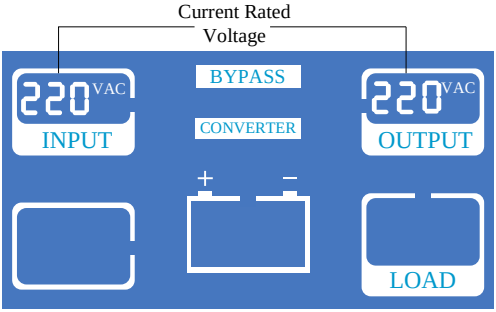

4) Frequency setting: Press ON/OFF to choose voltage and enter in frequency setting. Press FUNC to change rated frequency. Shown as following:

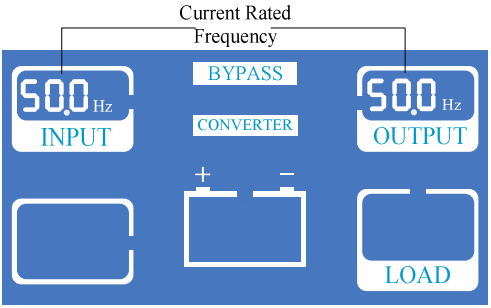

5) Mode setting: press ON/OFF to choose frequency and enter in mode setting, press FUNC to change mode. First code: n-normal mode, E-ECO mode. Second code indicated current voltage/frequency are listed in description of main menu in section 6.

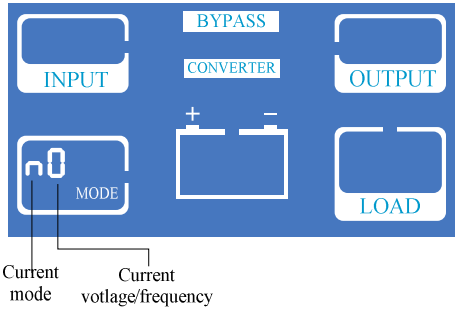

6) Protocol setting: press ON/OFF to choose mode and enter in protocol setting. Codes are shown in LOAD, press FUNC to change protocol.

The ID number of the UPS is displayed as 01-09, default 01.

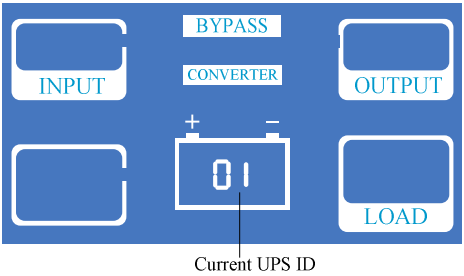

7) Protocol setting: press ON/OFF to choose mode and enter in protocol setting. Codes are shown in LOAD, press FUNC to change protocol. First code: 0-Modbus, 1-SNT, “CC”-current protocol.

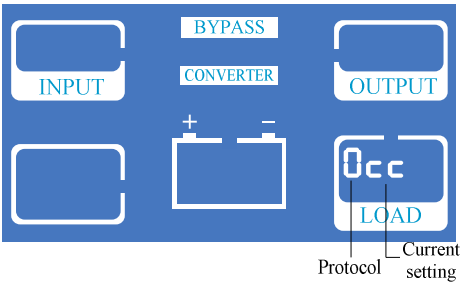

8) Press ON/OFF to choose protocol and display current setting.

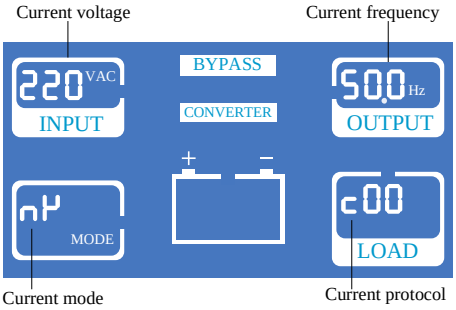

9) Press ON/OFF to save current setting and exit. If want to change, press FUNC and repeat the procedures above.

10) If you want to exit from setting mode and give up saving, press ON/OFF and FUNC together for 2.5 seconds when in setting mode.

11) Restart and check if the setting is right.

Annex D. Battery Kit Assembly (option)

1k battery kit

Step 1: Remove adhesive tapes.

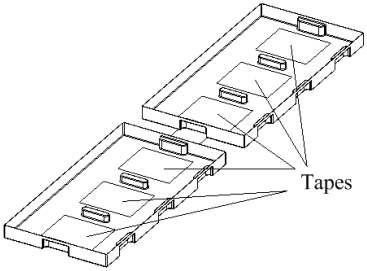

1

Step 2: Connect all battery terminals by following below chart.

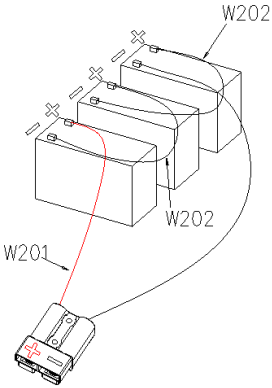

2

3

Step 3: Put assembled battery packs on one side of plastic shells.

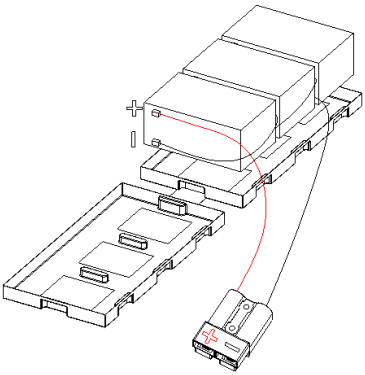

4

Step 4: Cover the other side of plastic shell as below chart. Then, battery kit is assembly well.

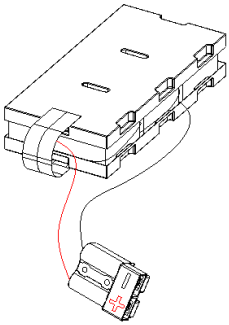

2k battery kit

Step 1: Remove adhesive tapes.

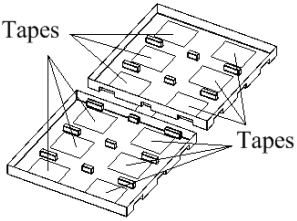

Step 2: Connect all battery terminals by following below chart.

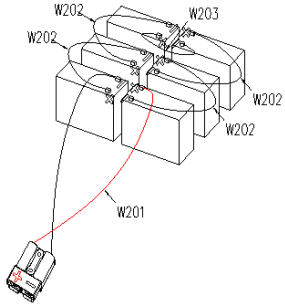

1 2

3 4

Step 3: Put assembled battery packs on one side of plastic shells.

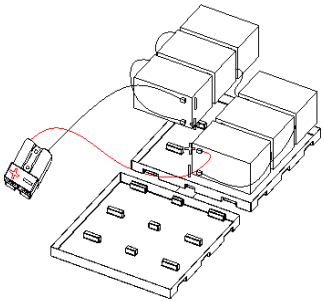

Step 4: Cover the other side of plastic shell as below chart. Then, battery kit is assembly well.

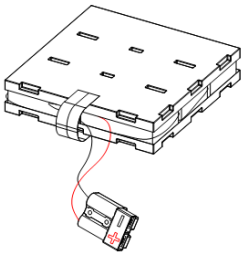

3k battery kit

Step 1: Remove adhesive tapes.

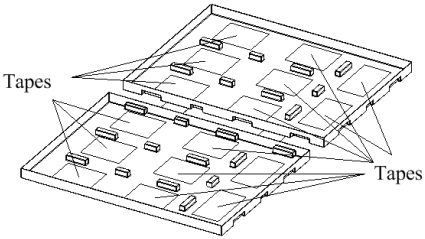

1

Step 2: Connect all battery terminals by following below chart.

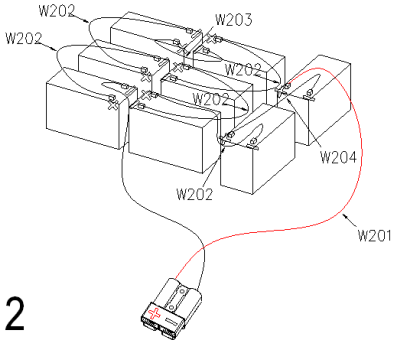

2

3

Step 3: Put assembled battery packs on one side of plastic shells.

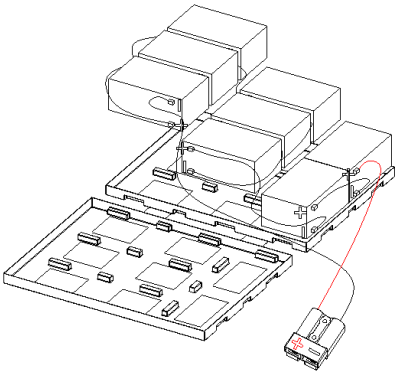

4

Step 4: Cover the other side of plastic shell as below chart. Then, battery kit is assembly well.

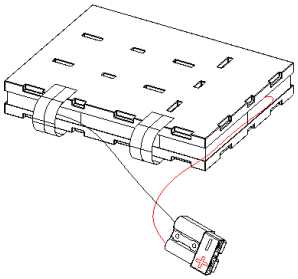

PowerMan

Est 1984

UPS

66001- 00218

V1.9

17 Honeydew Business Park, 1503 Citrus Street, Laser Park Honeydew
Tel: 0861 444 445 Email: sales@powerman.co.za Web: www.powerman.co.za