PowerMan User Manual
PM11-HF06 and HF10

January 2022

IMPORTANT SAFETY INSTRUCTIONS

SAVE THESE INSTRUCTIONS

This manual contains important safety instructions. Read all safety and operating instructions before operating the uninterruptible power systems (UPS). Adhere to all warnings on the unit and in this manual. Follow all operating and user instructions. This equipment can be operated by individuals without previous training.

This product designed for commercial/industrial use only. It is intended for use with lift support and other designated “critical” devices. Maximum load must not exceed that shown on the UPS rating label. The UPS is designed for data processing equipment. If uncertain, consult your dealer or local representative.

This UPS is designed for use on a properly grounded (earthed), 220/230/240VAC, 50 or 60Hz supply. The factory default setting is 220VAC/50Hz. Installation instructions and warning notices are in this manual.

The UPS 06-10@220/230/240VAC is designed for use with a three-wire input (L,N,G).

WARNING

THE BATTERY CAN PRESENT A RISK OF ELECTRICAL SHOCK AND HIGH SHORT CIRCUIT CURRENT. FOLLOWING PRECAUTIONS SHOULD BE OBSERVED BEFORE REPLACING THE BATTERY.

- Wear rubber gloves and boots.
- Remove rings, watches and other metal objects.
- Use tools with insulated handles.
- Do not lay tools or other metal objects on the batteries.
- If the battery is damaged in any way or shows signs of leakage, contact your local representative immediately.
- Do not dispose of batteries in a fire. The batteries may explode.
- Handle, transport and recycle batteries in accordance with local representative.

WARNING

ALTHOUGH THE UPS HAS BEEN DESIGNED AND MANUFACTURED TO ENSURE PERSONAL SAFETY, IMPROPER USE CAN RESULT IN ELECTRICAL SHOCK OR FIRE. TO ENSURE SAFETY, OBSERVE THE FOLLOWING PRECAUTIONS:

- Turn off and unplug the UPS before cleaning it.
- Clean the UPS with a dry cloth. Do not use liquid or aerosol cleaners.
- Never block or insert any objects into the ventilation holes or other openings of the UPS.
- Do not place the UPS power cord where it might be damaged.

CONTENTS

IMPORTANT SAFETY INSTRUCTIONS I

1. PRODUCT DESCRIPTION 3

1.1 ELECTROMAGNETIC COMPATIBILITY 3

1.2 FEATURES 4

1.3 MODELS 4

1.4 APPEARANCE 4

1.5 SYSTEM DESCRIPTION 6

1.5.1 Transient Voltage Surge Suppression (TVSS) and EMI/FRI Filters 6

1.5.2 Rectifier/Power Factor Correction (PFC) Circuit 6

1.5.3 Inverter 6

1.5.4 Battery Charger 7

1.5.5 DC-to-DC Converter 7

1.5.6 Battery 7

1.5.7 Static Bypass 7

1.6 UPS WORKING MODE 7

1.7 PRODUCT SPECIFICATION 9

2. INSTALLATION 11

2.1 UNPACKING AND INSPECTION 11

2.2 CONNECT INPUT/OUTPUT POWER CABLES 13

2.3 OPERATING PROCEDURE FOR CONNECTING THE LONG BACKUP TIME MODEL UPS WITH THE EXTERNAL BATTERY 14

2.4 CONNECT PARALLEL CABLES 15

2.5 CONNECT COMMUNICATION CABLES 16

3. CONTROLS AND INDICATORS 18

4. OPERATION **24**

4.1 OPERATION MODE **24**

4.2 PARALLEL OPERATION **25**

5. CONTROL AND COMMUNICATION **26**

5.1 SNMP CARD **26**

5.2 DRY CONTACT **26**

5.3 EPO（DEFAULT DOESN'T WORK） **27**

5.4 RS485 ..... **27**

6. MAINTENANCE **28**

6.1 BATTERY MAINTENANCE **28**

6.2 BATTERY DISPOSAL **28**

6.3 BATTERY REPLACEMENT PROCEDURES **29**

6.4 PRECAUTION **29**

6.5 CHECKING UPS STATUS **29**

7. TROUBLE SHOOTING **30**

ANNEX A. PARALLEL SETTING **32**

ANNEX B. MECHANICAL SIZE **33**

ANNEX C. BATTERY ASSEMBLY **35**

ANNEX D. BATTERY RUN TIME **37**

1. Product Description

Congratulations on your choice of the UPS uninterruptible power system(UPS), the UPS comes in nominal power ratings of 6000VA,10000VA. It is designed to provide conditioned power to computers and other sensitive electronic equipment.

This chapter gives a brief description of the UPS, including the UPS features, models, appearance, operating principle and specification.

1.1 Electromagnetic Compatibility

*** Safety**	
IEC/EN 62040-1-1	
*** EMI**	
Conducted Emission.....IEC/EN 62040-2	Category C3
Radiated Emission.....IEC/EN 62040-2	Category C3
***EMS**	
ESD.....IEC/EN 61000-4-2	Level 4
RS.....IEC/EN 61000-4-3	Level 3
EFT.....IEC/EN 61000-4-4	Level 4
SURGE.....IEC/EN 61000-4-5	Level 4
Low Frequency Signals.....:IEC/EN 61000-2-2	
Warning: This is a product for commercial and industrial application in the second environment-installation restrictions or additional measures may be needed to prevent disturbances.	

NOTICE:

This is a product for restricted sales distribution to informed partners. Installation restrictions or additional measures may be needed to prevent radio interference.

Operated the UPS in an indoor enviroment only in an ambient temperature range of 0-40°C(32-104°F). Install it in a clean environment, free from moisture, flammable liquids, gases and corrosive substance.

This UPS contains no user-serviceable parts except the internal battery pack. The UPS on/off push buttons do not electrically isolate internal parts. Under no circumstance attempt to gain access internally, due to the risk of electric shock or burn.

Do not continue to use the UPS if the panel indications are not in accordance with these operating instructions or the UPS performance alters in use. Refer all fault to your dealer.

Servicing of batteries should be performed or supervised by personnel knowledgeable of batteries and the precautions. Keep unauthorized personnel away from the batteries. Proper disposal of batteries is required. Refer to your local laws and regulations for disposal requirement.

DO NOT CONNECT equipment that could overload the UPS or demand surge current from the UPS, for example: electric drills, vacuum cleaners, hair dryer, motors and so on.

DO NOT CONNECT equipment that is life related, for example: medical equipment, elevator and so on.

Storing magnetic media on top of the UPS may result in data loss or corruption.

Turn off and isolate the UPS before cleaning it. Use only a soft cloth, never liquid or aerosol cleaners.

1.2 Features

The UPS features include:

- Providing more high efficient AC power, compared with the previous generation
- Full digital control technology based on DSP to achieve high reliability and power function
- Digitally controlled and intelligent battery management to extend the battery life
- Operation and display with LCD and LED indicators, which can indicate all system information
- Fan speed can be auto conditioned according to the loads, input voltage or working mode
- Digitally controlled charger current and voltage, compared with the previous generation which is fixed in hardware
- Super high power density
- Self aging function enable user to test UPS at customer site without load
- Failure waveform record function help to solve problem quickly

1.3 Models

Available models are shown as Table1-1:

Table 1- 1: Models

Model	Nominal Power	Model	Norminal Power
6K long backup	6000VA/6000W	10K long backup	10000VA/10000W
6K standard backup	6000VA/6000W	10K standard backup	10000VA/10000W

Long back up model: no internal batteries, max charger current is 5A, settable

Standard model: include internal batteries, charger current is 1A

1.4 Appearance

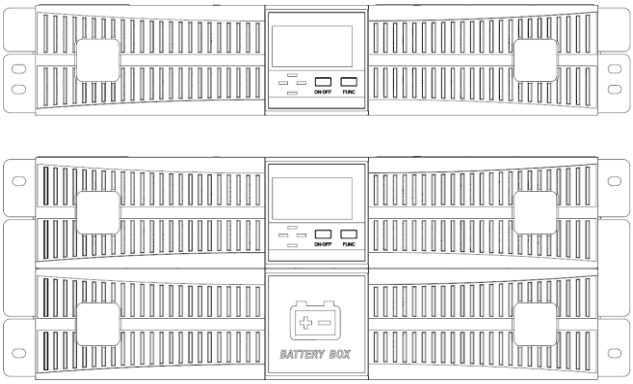

Fig 1- 1: Front View

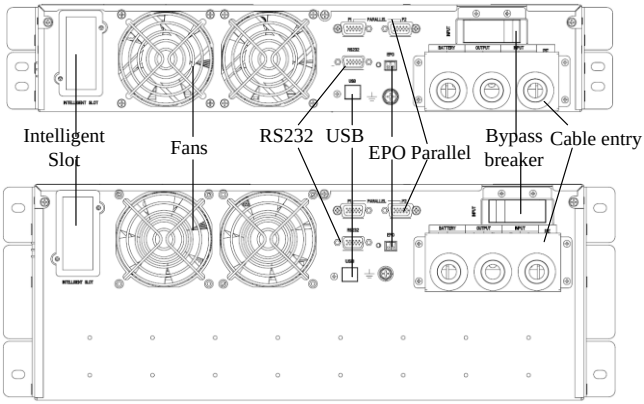

Fig 1- 2: Rear View

As shown in Fig 1-2, the rear panel provides the following compoentes and function:

- USB: B type, used to connect monitoring software
- EPO: NC
- Parallel port: option
- Reserved: reserved for customer function, such as manual bypass, battery breaker, socket and so on
- Cable entry
- Bypass breaker: surge proection
- Cable proetector: cable entry, fix cables, safety
- Cold start: start UPS from battery
- Fans: intelligent fan speed control
- RS232: DB9 type, used to connect monitoring software

1.5 System description

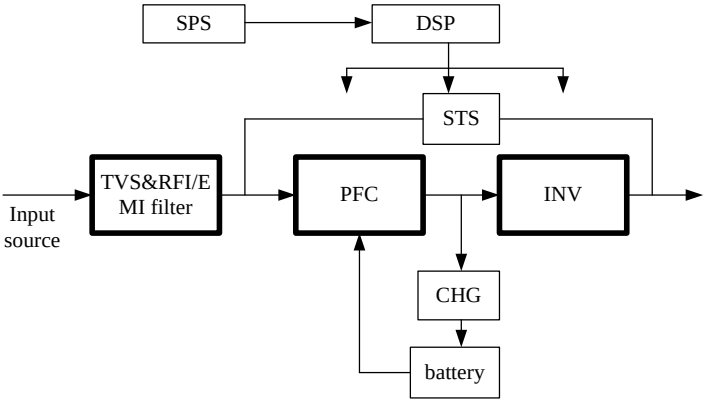

Fig 1- 3: UPS system

1.5.1 Transient Voltage Surge Suppression (TVSS) and EMI/FRI Filters

These UPS components provide surge protection and filter both electromagnetic interference (EMI) and radio frequency interference (RFI). They minimize any surge or interference present in the utility line and keep the sensitive equipment protected.

1.5.2 Rectifier/Power Factor Correction (PFC) Circuit

In normal operation, the rectifier/power factor correction (PFC) circuit converts utility AC power to regulated DC power for use by the inverter while ensuring that the waveform of the input current used by the UPS is near ideal. Extracting this sinewave input current achieves two objects:

- The utility power is used as efficiency as possible by the UPS.
- The amount of distortion reflected on the utility is reduced.

This results in cleaner power being available to other devices in the building not being protected by the UPS.

1.5.3 Inverter

In normal operation, the inverter utilize the DC output of the power factor correction circuit and inverters it into precise, regulated sinewave AC power. Upon a utility power failure, the inverter receives its required energy from the battery through the DC-to-DC converter. In both modes of operation, the UPS inverter is on-line and continuously generating clean, precise, regulated AC output power.

1.5.4 Battery Charger

The battery charger utilizes energy from the DC bus and precisely regulates it to continuously charge the batteries. The batteries are being charged whenever the UPS is connected to utility power.

1.5.5 DC-to-DC Converter

The DC-to-DC converter utilizes energy from the battery system and raises the DC voltage to the optimum operating voltage for the inverter. The converter includes boost circuit which is also used as PFC.

1.5.6 Battery

The 6K/10K Standard include value-regulated, non-spillable, lead acid batteries inside. To maintain battery design life, operate the UPS in an ambient temperature of 15-25°C.

1.5.7 Static Bypass

The UPS provides an alternate path for utility power to the connected load in the unlikely event of a UPS malfunction. Should the UPS have an overload, over temperature or any other failure condition, the UPS automatically transfers the connected load to bypass. Bypass operation is indicated by an audible alarm and illuminated amber Bypass LED. To manually transfer the connected load from the inverter to bypass, press the ON/OFF button once.

NOTICE： *The bypass power path does NOT protect the connected equipment from disturbances in the utility supply.*

1.6 UPS Working Mode

Normally UPS working mode include normal mode, bypass mode, battery mode, ECO mode, frequency converter mode, self aging mode.

Normal mode:

Shown as *Fig 1-4*, rectifier supply DC supply to inverter, the load is feed by inverter. Charger is charging the battery.

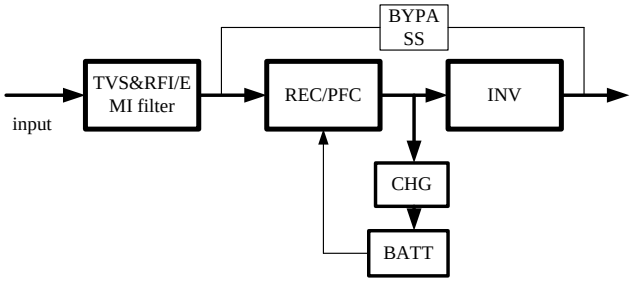

Fig 1- 4: Normal Mode

Static Bypass Mode

If inverter is failure or overload, UPS will transfer to bypass mode. Or press ON/OFF to transfer to bypass mode in normal mode. The load is feed by input power directly, and UPS can not protect load from surge. Shown as *Fig 1-5*.

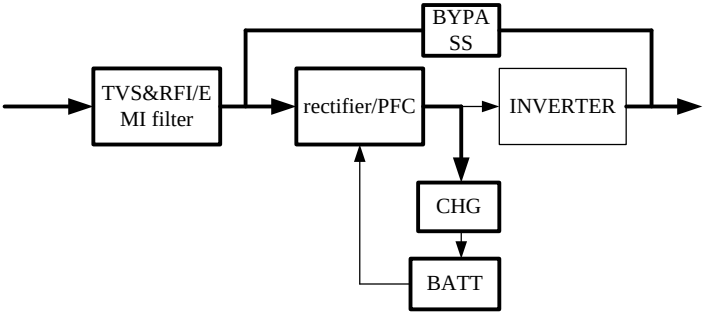

Fig 1- 5: Bypss Mode

Battery Mode

If input power is failure when in normal mode, UPS will transfer to battery mode. In this mode, the battery provide power to inverter. Shown as *Fig 1-6*.

NOTICE: press ON/OFF in battery mode will shutdown UPS completely.

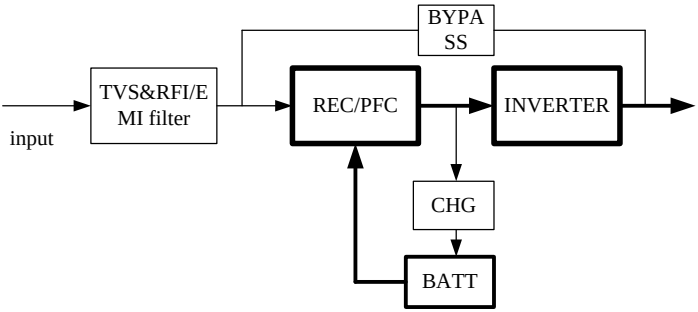

Fig 1- 6: Battery Mode

ECO Mode (only available for single unit)

When UPS works in ECO mode, load is feed by bypass. Inverter is standby, charger is working normally. The efficiency is up to 98%, but UPS can protect the load from surge disturb. If input power is failure, UPS transfer to battery mode. Shown as *Fig 1-7*.

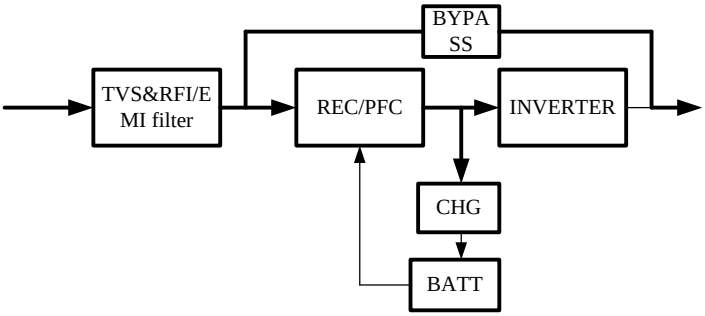

Fig 1- 7: ECO Mode

Frequency Converter Mode

In this mode, input and output nominal frequency is different, and the bypass is forbidden to use.

NOTICE: *if overload timeout, UPS will shutdown output.*

NOTICE: *the load should be derated to 50% and below.*

Self Aging Mode

If users want to burn in UPS without load, could set the UPS as **Self Aging Mode**, in this mode, the current flow through rectifier, inverter, and back to input through bypass. It needs only 5% loss to burn in UPS with 100% load. Shown as Fig 1-8.

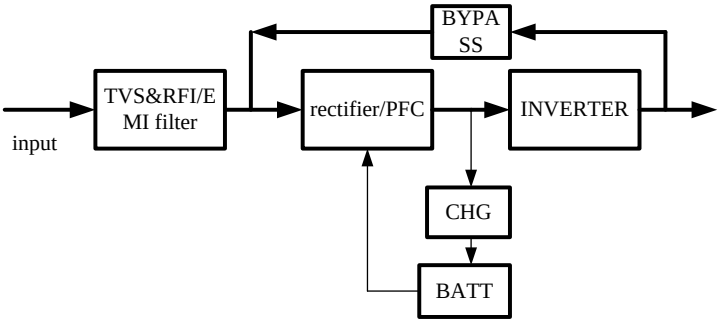

Fig 1- 8: Self Aging Mode

1.7 Product Specification

1. General Specification

Model	6KS	6KL	10KS	10KL
Power Rating	6KVA/6KW		10KVA/10KW	
Frequency (Hz)	50/60		50/60	

Input	**Voltage**	(176-288)VAC		(176-288)VAC	
	Current	36A max.		60A max	
Battery	**Voltage**	192VDC		192VDC	
	Current	40A max		66A max	
Output	**Voltage**	220/230/240		220/230/240	
	Current	27/26/25A		45/43/42A	
Efficiency		94.5% max		95% max	
Dimension (WxDxH) mm		440*660*172 440*550*86		440*660*172 440*550*86	
Weight (kg)		58	16	62	18

2. Electrical Performance

Input			
Model	Voltage	Frequency	Power Factor
UPS	Single-phase	40-70Hz	>0.99(Full load)

Output					
Voltage Regulation	Power Factor	Frequency tolerance.	Distortion	Overload capacity	Crest ratio
±1%	1	±0.1 of normal	THD<1% Full load (Linear Load)	110% load: transfers to Bypass mode after 60 minutes 130% load: transfers to Bypass mode after 1 minute 150% load :transfers to Bypass mode after 0.5 minute and shutdown the output after 1 minute	3:1 maximum

3. Operating Environment

Temperature	**Humidity**	**Altitude**	**Storage temperature**
0°C-40°C	<95%	<1000m	0°C-70°C

NOTICE: *If the UPS is installed or used in a place where the altitude is above than **1000m**, the output power must be derated in use, please refer to the following:*

Altitude (M)	**1000**	**1500**	**2000**	**2500**	**3000**	**3500**	**4000**	**4500**	**5000**
Derating Power	100%	95%	91%	86%	82%	78%	74%	70%	67%

2. Installation

The system should be installed and wired only by qualified electricians in accordance with applicable safety regulations.

NOTICE: *UPS operation in sustained temperature outside the range of 15-25℃ (59°-77℉) reduces battery life.*

2.1 Unpacking and Inspection

1) Unpack the packaging and check the package contents. The shipping package contains:
   - 1 UPS
   - 1 user manual
2) Inspect the appearance of the UPS to see if there is any damage during transportation. Do not turn on the unit and notify the carrier and dealer immediately if there is any damage or lacking of some parts.

2.2 Main Cabinet Installation

Two installation modes are available: Tower installation and Rack installation, depending on available space and user considerations. You can select an appropriate installation mode according to the actual conditions.

2.2.1 Notes for Installation

1) The UPS must be installed in a location with good ventilation, far away from water, inflammable gas and corrosive agents.
2) Ensure the air vents on the front and rear of the UPS are not blocked. Allow at least 0.5m of space on each side.
3) Condensation to water drops may occur if the UPS is unpacked in a very low temperature environment. In this case it is necessary to wait until the UPS is fully dried inside out before proceeding installation and use. Otherwise there are hazards of electric shock.

2.2.2 Tower Installation

Various installation configurations are available: single UPS, single UPS with single or multiple battery cabinets. Their installation methods are all the same.

Please prepare support bases and spacers before installation

1) Take out the support bases and spacers and then assemble the spacers and the support bases, shown as *Fig 2-1*. 4 support bases are needed for long backup models UPS, 4 extra spacers are needed for standard models UPS or battery cabinets.

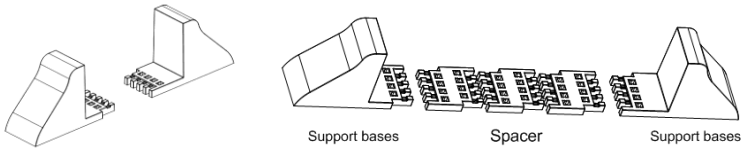

Fig 2- 1: Support Bases and Spacers Assembly

2) Rotate the direction of UPS LCD and Logo

   a.remove front panels as Fig 2-2

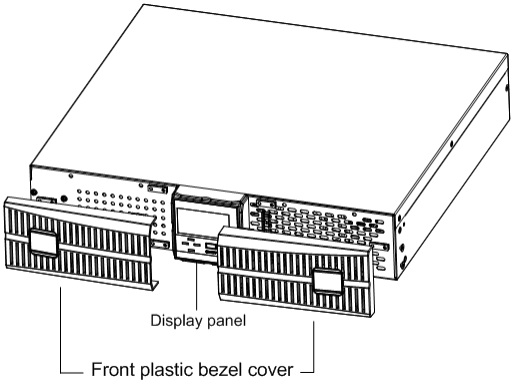

Fig 2- 2: Remove Front Panel

b. Rotate LCD and LOGO clockwise

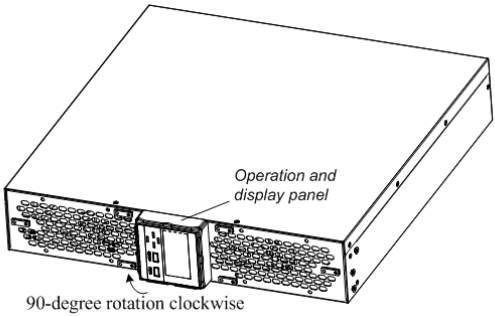

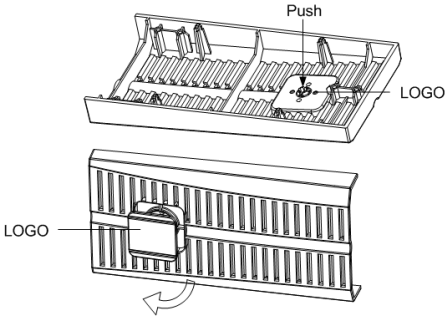

Fig 2- 3: Rotate LCD and LOGO

c. recover the front panel

3) Place the UPS and battey cabinet on te support bases

2.2.3 Rack Installation

Battery cabinets must be installed firstly because battery cabinets are too heavy. And two or more installation personnel are required to install them at the same time. Please install them from bottom to top.

1) Install the guide rail

2) Put the UPS and battery cabinet on the guide rail, fix the units to the service rack

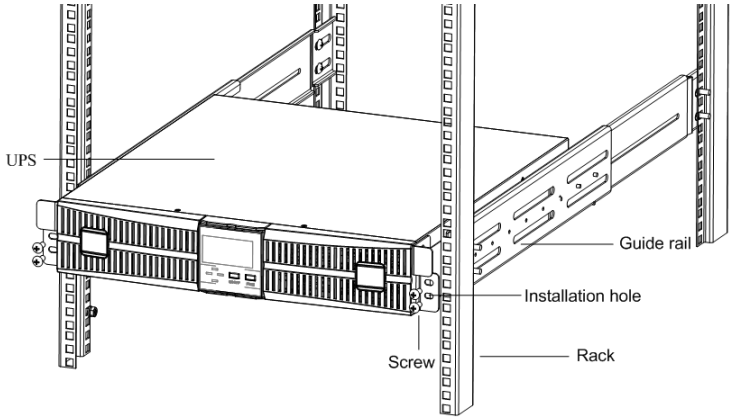

Fig 2- 4: Rack Mounted Installation

2.2 Connect Input/Output Power Cables

Installation and wiring must be performed in accordance with the local electric code and the following instructions by professional personnel.

For safety, please cut off the mains power switch before installation. Open the battery breaker for long backup time model ("L" model).

1) Open the terminal block cover located on the rear panel of the UPS, please refer to the appearance diagram.
2) For 6k(L) UPS, it is recommended to select the UL1015 10AWG(6mm^2) wire or other insulated wire which complies with AWG Standard for the UPS input and output wirings.
3) For 10k(L) UPS, it is recommended to select the UL1015 8AWG(10mm^2) wire or other insulated wire which complies with AWG Standard for the UPS input and output wirings.

NOTICE: *Do not use the wall receptacle as the input power source for the UPS, as its rated current is less than the UPS's maximum input current. Otherwise the receptacle may be burned and destroyed. For the long backup time modes, make sure that the capacity of batteries is larger than 24AH to avoid over charging. If not, pleaser confirm the charge current and set the charge current according to battery*

capacity.

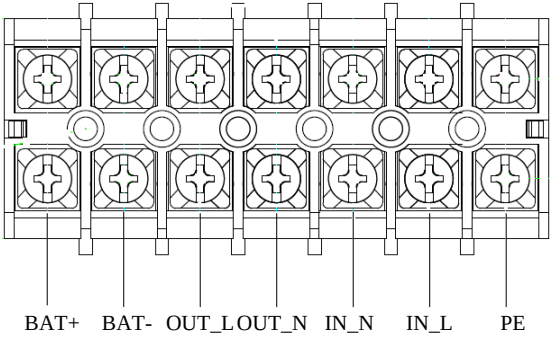

Fig 2- 5: Terminal Block Wiring Diagram

NOTICE： *Make sure that the input and output wires and the input and output terminals are connected tightly.*

6) The protective earth ground wire refers to the wire connection between the equipment which consumes electric equipment and the ground wire. The wire diameter of protective earth ground wire should be at least as above mentioned for each model and green wire or green wire with yellow ribbon wire is used.
7) After having completed the installation, make sure the wiring connection is correct.
8) Please install the output breaker between the output terminal and the load.
9) To connect the load with the UPS, please turn off all the loads first, then perform the connection and finally turn on the loads one by one.
10) No matter the UPS is connected to the utility power or not, the output of the UPS may have electricity. The parts inside the unit may still have hazardous voltage after turning off the UPS. To make the UPS have no output, power off the UPS, and then disconnect the utility power supply.
11) Suggest charging the batteries for 8 hours before use. After connection, turn the input breaker in the “ON” position, the UPS will charge the batteries automatically. You can also use the UPS immediately without charging the batteries first, but the backup time may be less than the standard value.
12) If it is necessary to connect the inductive load such as a motor or a laser printer to the UPS, the start-up power should be used for calculating the capacity of the UPS, as its start-up power consumption is too big when it is started.

2.3 Operating procedure for connecting the long backup time model UPS with the external battery

1. The nominal DC voltage of external battery pack is 192VDC. Each battery pack consists of 16 pieces of 12V maintenance free batteries in series. To achieve longer backup time, it is possible to connect multi-battery packs, but the principle of “same voltage, same type” should be strictly followed.

2. For UPS 6KL/10KL, select the UL1015 10AWG(10mm^2)/8AWG(16mm^2) wire or other insulated wire which complies with UL Standard for the UPS battery wirings. The procedure of installing battery bank should be complied with strictly. Otherwise you may encounter the hazardous of electric shock.
   1) A DC breaker must be connected between the battery pack and the UPS. The capacity of breaker must be not less than the data specified in the general specification.
   2) Set the battery pack breaker in “OFF” position and connect the 16 pieces of batteries in series.
   3) You must connect the external battery cable to the battery first, if you connect the cable to the UPS first, you may encounter the hazardous of electric shock. The positive pole of the battery is connected to the UPS with red wire; the negative pole of the battery is connected to the UPS with black wire; the green and yellow ribbon wire is connected to the ground of the battery cabinet.
3. To complete the connection of the external battery cable into the UPS. Do not attempt to connect any loads to the UPS now. You should connect the input power wire to the right position first. And then set the breaker of the battery pack in the “ON” position. After that set the input breaker in the “ON” position. The UPS begins to charge the battery packs at the time.

2.4 Connect Parallel Cables

1. Brief introduction

As long as the UPS is equipped with parallel cables, up to 4 UPSs can be connected in parallel to realize output power sharing and power redundancy.

2. Parallel installation

1) Users need to opt two standard 15-pin communication cables which length is appropriate to be less than 3m.
2) Strictly follow the stand-alone wiring requirement to perform the input wiring of each UPS.
3) Connect the output wires of each UPS to an output breaker panel.
4) **All UPS can share the same battery pack.**
5) Please refer to the wiring diagram in the next page, and opt suitable breaker.

■ The requirement of the output wiring is as follows:

- It’s recommended that the wires of output of the UPS to be less than 20m.
- The difference between the wires of input & output of the UPSs is required to be less than 10%.

The wiring diagram is shown as follows:

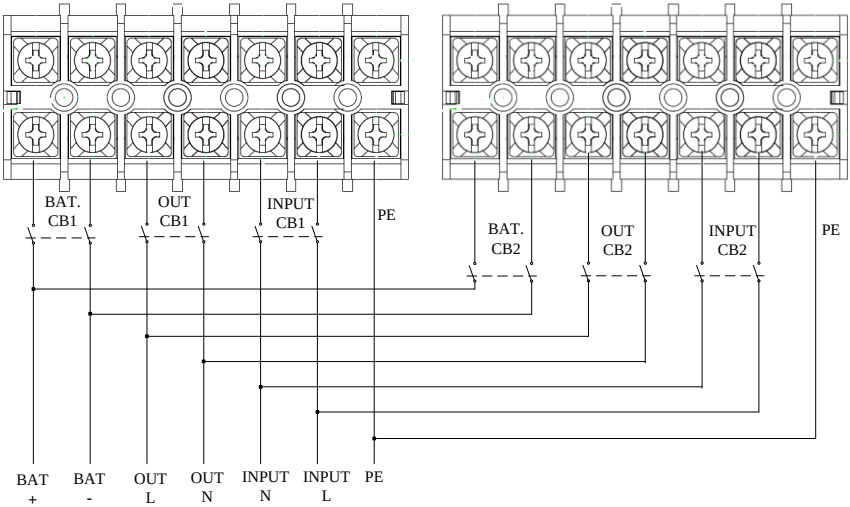

Fig 2- 6: Parallel Wiring Diagram

2.5 Connect Communication Cables

Communication cable includes: USB cable and parallel communication cables.

Connect USB cable:

1) Connect USB cable to USB port at the back panel of UPS shown as Fig 1-2

2) Connect USB cable to PCB

Connect communication cables:

If there are two UPS are paralleled, connect communication cables as Fig.2-7

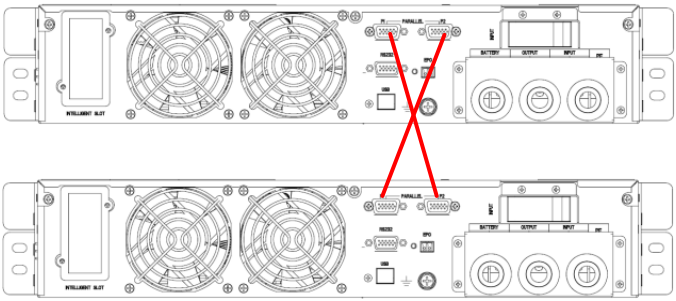

Fig 2- 7: 2 UPS Paralleled System

If there are 2 UPS are paralleled, connect communication cables as Fig 2-8

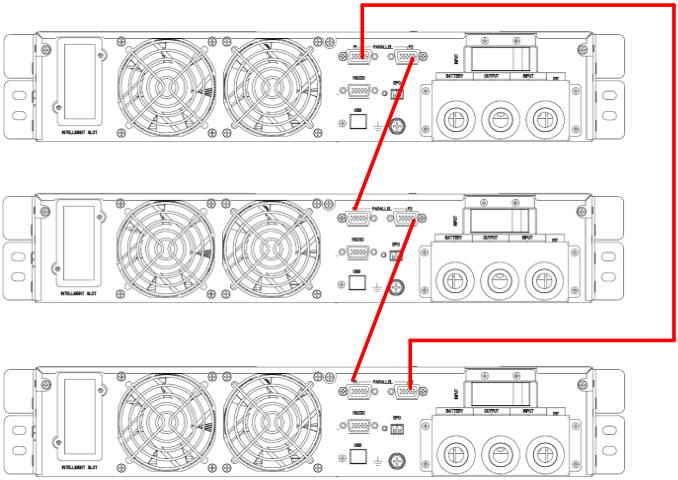

Fig 2- 8: 3 UPS Paralleled System

If there are 2 UPS are paralleled, connect communication cables as Fig 2-9

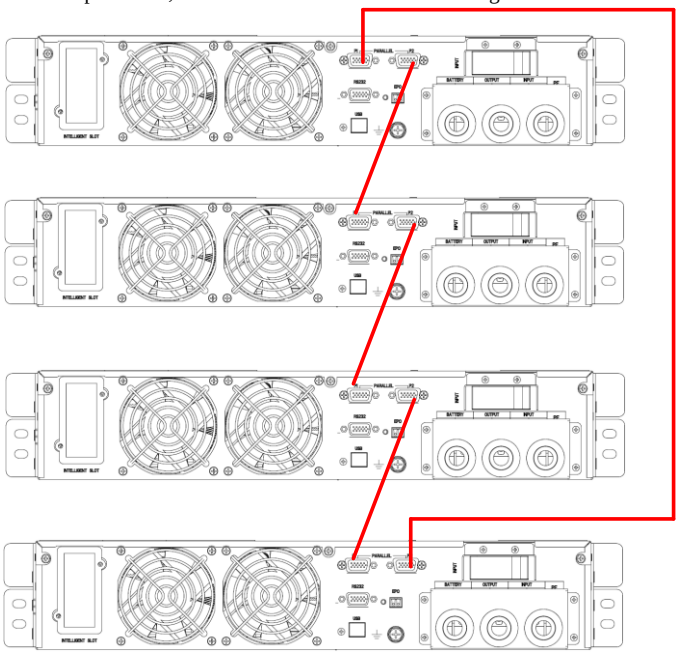

Fig 2- 9: 4 UPS Paralleled System

NOTICE: must set the UPS is parallel system as “parallel mode” via software according to “Annex A” before start parallel system

3. Controls And Indicators

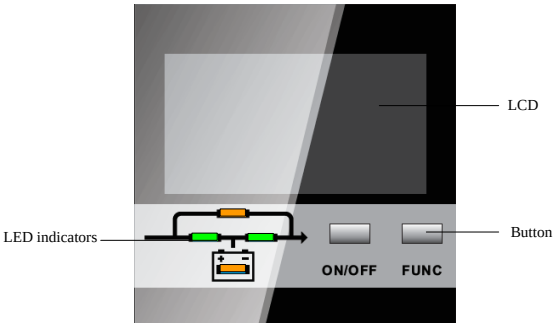

Fig 3- 1: Display Panel

Description of Panel

Controls	Description
ON/OFF	1.Press ON/OFF to start inverter when rectifier is OK **NOTE** *Not available when UPS is set in automatically start mode* 2.Press ON/OFF to shutdown inverter and transfer to bypass 3.Press ON/OFF to shutdown UPS completely when UPS is in battery mode 4.Press ON/OFF to confirm setting when in setting mode
FUNC	Functional button: 1.Press FUNC to page down to see LCD menu 2.Press FUNC for 2.5s at the page 1 to mute off, press again to mute on 3.Press FUNC and ON/OFF together for 2.5s to enter in setting mode 4.Press FUNC for 2.5s at the page 4 to fault clear
Indicators	**Description**
REC	Rectifier indicator: green--rectifier is normal, green flicker--rectifier is starting, dark—rectifier is not working
INV	Inverter indicator: green--inverter is normal, green flicker--inverter is starting or tracking with bypass(ECO), dark—inverter is not working
BYP	Bypass indicator: yellow—bypass is normal, yellow flicker—bypass alarm ,dark—UPS is in normal mode and bypass is normal
BAT	Battery indicator: yellow—battery discharged, yellow flicker—No

	battery or battery alarm, dark—battery is connected

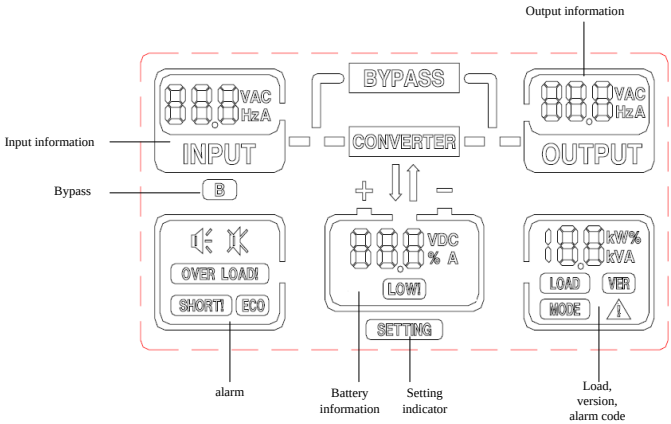

Fig 3- 2: LCD Menu

Description of LCD Menu

Menu	Information
Input information	Main input: voltage VAC, current A, frequency Hz Bypass input(bypass “B” flicks): Voltage VAC, current A, frequency Hz
Battery information	Battery: voltage VDC, discharge/charger current A, remained capacity %, battery low alarm LOW!
Output information	Output information: Voltage, current, frequency
Alarm	:mute on/off OVER LOAD!: over load SHORT: output short ECO: working in ECO mode
Load/Version/Code	Load: active load KW, apparent load KVA, load percent % VER: firmware version MODE: system mode, S-single mode, P- parallel mode, E-ECO mode, A-self aging mode ⚠: warning code, refer to “***7. Trouble Shooting***” to get detailed code list
Others	B: bypass input menu SETTING: LCD is in setting mode BYPASS: bypass conversion

Press **FUNC** to check menu:

Page	description
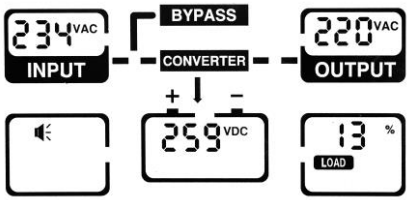	Page 1: INPUT voltage: 234VAC OUTPUT voltage: 220VAC Battery voltage: 259VDC LOAD : 13%. Load percent(%), active power(KW), apparent power(KVA) are displayed in turn *Press "FUNC" for 2.5s in this page to mute off*
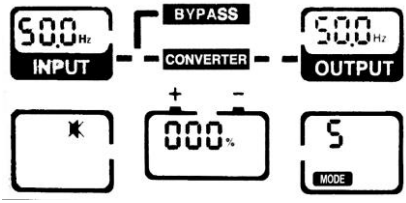	Page 2: INPUT frequency: 50Hz OUTPUT frequency: 50Hz Remained battery capacity: 0% (no battery) System MODE: S-single unit
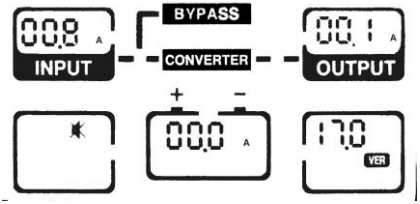	Page 3: INPUT current: 0.8A OUTPUT current: 0.1A Battery current: 0.0A (downwards arrow: charge, upwards arrow: discharge, no arrow: no battery) Firmware VERsion: V0.17 (17.0)
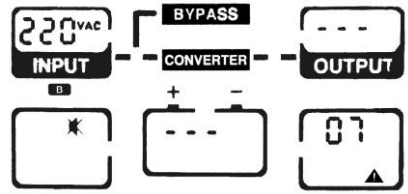	Page4: "B": flicks, bypass input menu now Bypass INPUT voltage: 220VAC ⚠alarm code: 07 *Press "FUNC" for 2.5s to manually fault clear*

Parameters setting

If want to set rated parameters, press ON/OFF and FUNC buttons together for 2.5s to enter in setting mode, "SETTING" on the bottom of LCD present and all LEDs flicks.

Current setting page	All current setting is displayed in turn, press ON/OFF to confirm and exit, press FUNC to enter pass word.	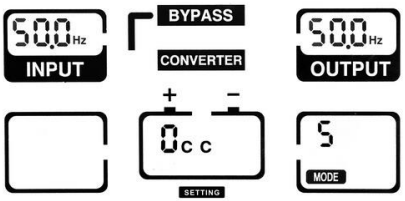
Enter pass word	Enter a password to enter the Settings page, press FUNC to select, press ON/OFF to confirm selection and enter in next page. The pass word is 233.	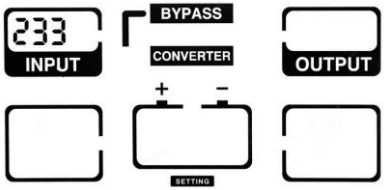
Input rated voltage setting	Could select input voltage as 200VAC/ 208VAC/ 220VAC/ 230VAC/ 240VAC(For low voltage system 110/115/120/ 127Vac could be set), press FUNC to select, press ON/OFF to confirm selection and enter in next page	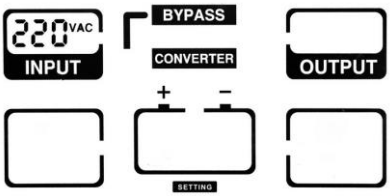
Input rated frequency setting	Could select input frequency as 50Hz/60Hz, press FUNC to select, press ON/OFF to confirm selection and enter in next page	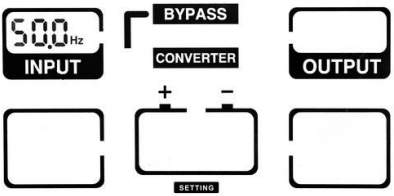
Output rated voltage setting	Could select output voltage as 200VAC/ 208VAC/ 220VAC/ 230VAC/ 240VAC(For low voltage system 110/115/120/ 127Vac could be set), press FUNC to select, press ON/OFF to confirm selection and enter in next page	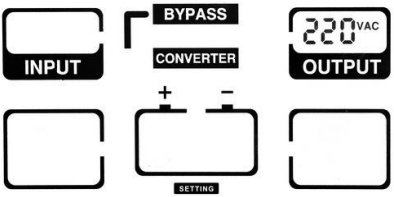

Output rated frequency setting	Could select output frequency as 50Hz/60Hz, press FUNC to select, press ON/OFF to confirm selection and enter in next page	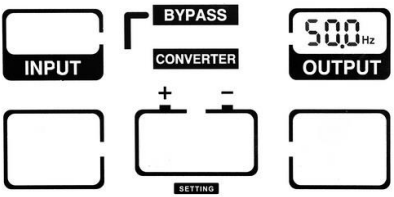
Battery number setting	Could select battery number as 16 blocks (192VDC) 18 blocks (216VDC) 20 blocks (240VDC) 22 blocks (264VDC) 24 blocks (288VDC) **For low voltage system 144/168/192Vdc could be set**, press FUNC to select, press ON/OFF to enter in next page	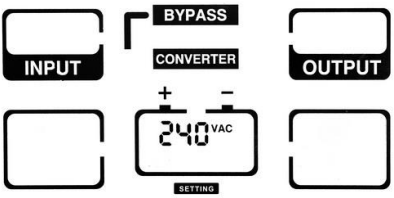
Charger current setting	Charger current could be set as below: Standard model: 1A Long backup model: 1,2,3,4,5A Optional super charger: 1-10A Press FUNC to select, press ON/OFF to confirm and enter in next page	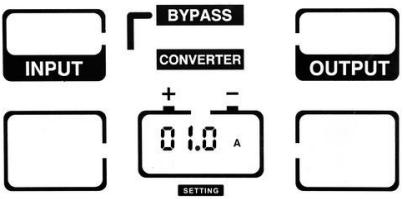
Communication protocol setting	0CC-MODBUS 1CC-SNT Press FUNC to select, press ON/OFF to confirm and enter in next page	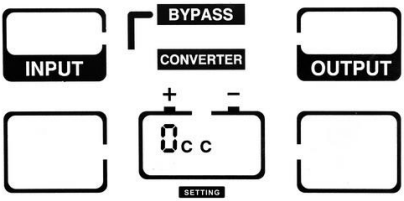
Communication ID setting	002- Communication ID2 Communication ID could be set as 001 to 020. Press FUNC to select, press ON/OFF to confirm and enter in next page	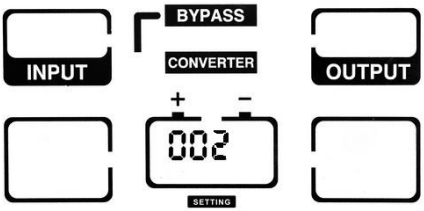

System mode	S-single mode P-parallel mode E-ECO mode A-self aging mode Press FUNC to select, press ON/OFF to confirm and enter in next page.	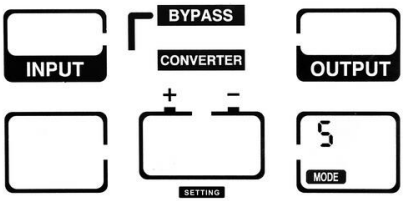
	001- parallel ID1 In parallel mode, the parallel ID could be set as 000 to 008 Press FUNC to select, press ON/OFF to confirm and enter in next page.	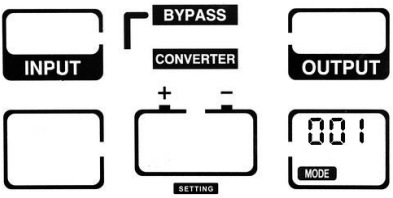
Current setting page	All current setting is displayed together, press ON/OFF to confirm and exit, press FUNC to change selection. The setting will be activated after restart UPS.	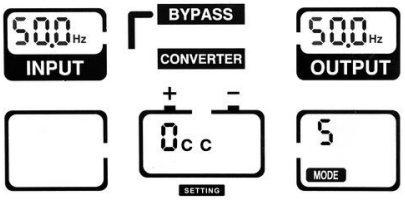

NOTICE: *when rated voltage is 200/208VAC, the output PF is 0.9. If other parameters are needed to change, please set it via monitoring software.*

4. OPERATION

4.1 Operation Mode

4.1.1 Turn on the UPS in normal mode

1) After you make sure that the power supply connection is correct, and then close the battery breaker (this step only for long backup time model), after that close the main input and bypass input breaker. At this time the fans rotate and the UPS operates in Bypass mode.

2) After REC led is ready green, the BYPASS starts and bypass LED is yellow, now the output load is feed by bypass.

NOTE: *In some application, UPS is set to start manually, you should press ON/OFF to start inverter.*

3) The inverter LED start to flick, and about 1 minute later, the UPS turn into normal working mode. If the utility power is abnormal, the UPS will operate in Battery mode without output interruption of the UPS.

4.1.2 Turn on the UPS from battery without utility power

1) After you make sure that the breaker of the battery pack is in the "ON" position (this step only for long backup time model).

2) Remove the right plastic panel

3) Press the cold start button to power on the UPS as ***Fig 4.1.*** Press "ON/OFF" for 2.5s when buzzer is on.

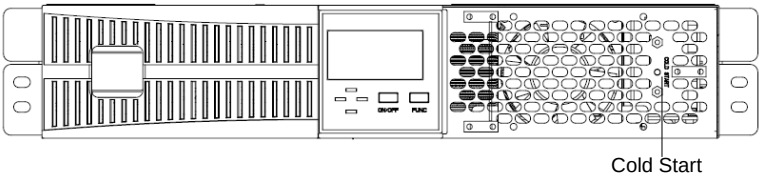

Fig 4- 1: Cold Start Button

4) About 1 minute later, the UPS turns into Battery mode. If utility power recovers, UPS will transfers to normal mode. Cover the right panel then.

4.1.3 Turn off the UPS in normal mode

1) Shutdown the connected load and open external output breaker

2) Press ON/OFF button in condition of normal mode to transfer to bypass.

3) For long backup model, open the mains input breaker and bypass input breaker, then open the battery breaker to turn off UPS completely.

3)* For standard model, open mains input and bypass input breaker, the UPS will shutdown completely after a few seconds.

4.1.4 Turn off the UPS in Battery mode

1) To power off the UPS by pressing the ON/OFF button for more than 1 second, then choose YES.
2) When being powered off, the UPS will turn into No Output mode. Finally not any display is shown on the display panel and no voltage is available from the UPS output.

NOTICE： *Please turn off the connected loads before turning on the UPS and turn on the loads one by one after the UPS is working in INV mode. Turn off all of the connected loads before turning off the UPS.*

Warning: *internal DC bus still has hazadous high votlage in serveral minutes, please wait for at least 5 minutes to open UPS. And check the DC bus votlage before maintenance.*

4.2 Parallel Operation

4.2.1 Turn on the UPSs of Parallel System

Make sure the power cables and communication cables are correctly. Shown as *Fig 2-2, Fig 2-3, Fig 2-4:*

1) Close external output CB1 and CB2
2) Close mains input breakers and bypass input breakers of UPS1 and UPS2, after about 2 minutes, UPSs works in parallel mode
3) Close external battery breakers
4) Turn on load. The load is now powered by parallel system.

4.2.2 Turn off Parallel System

1) Turn off the connected load. Press ON/OFF button to transfer to bypass. Open output breakers. Open mains input and bypass input breakers of all UPSs.

2) If is long backup model, open external battery breakers. After a few seconds, the UPSs will shutdown completely.

4.2.3 How to install a new parallel UPS system:

1) Before installing a new parallel UPS system, user need to prepare the input and output wires, the output breaker, and the parallel cables.
2) Open the input and output breakers of each UPS. Connect the input wires, output wires and battery wires.
3) Connect each UPS one by one with the parallel cables.
4) Close the battery breakers and the input breakers of all of the UPSs in the parallel system in turn.
5) Turn on each UPS in turn and observe their display. Make sure that each UPS displays normal and all the UPSs transfer to the INV mode normally.

4.2.4 How to remove a single UPS from the parallel system:

1) If you need to remove one UPS of the UPSs parallel system which is in normal mode, press the ON/OFF button of the UPS that is confirmed to be removed and the UPS will cut off its output immediately.
2) Turn off mains input breaker, bypass input breaker, the external mains input breaker, the output breaker and the battery breaker.
3) Press the others UPSs's ON/OFF button. All of them transfer to the Bypass mode.
4) Remove the parallel cables of the UPS that need to be removed.
5) Press ON/OFF button of remained UPSs to make the UPSs transfer to INV output.

5. Control and Communication

UPS includes several communication ports: RS232,EPO,SNMP card, USB, dry contact, RS485.

NOTICE: *Only one of SNMP card, dry contact and RS485 can be at the same time. Only one of RS232 and USB is available at the same time.*

5.1 SNMP Card

SNMP card is used to monitor the UPS via TCP/IP, user can check the UPS status, voltage and current on the internet. Pleaser refer to the user manual of SNMP card to get more detailed information.

5.2 Dry Contact

There are two types of dry contact for option: DB9, phoenix terminal.

Max output current for dry contact is 1A. The function of dry contact is listed as *Fig 5-1*:

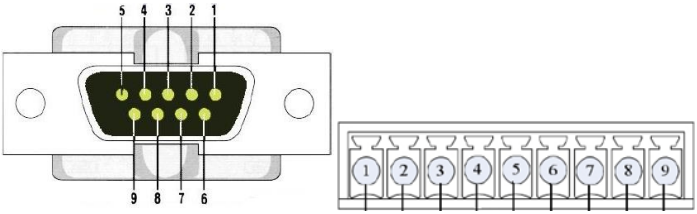

DB9 port phoenix terminal

Fig 5- 1:Dry Contact

Table 5- 1: Function of Dry Contact

Function	DB9	Phoenix	Description
UPS fault	1	9	Opened from common connection: UPS is abnormal. Closed: UPS is normal
General	2	7	Opned from common connection: UPS is warning Closed: UPS is normal
GND	3	2	Internal GND, used to connect external power supply 12-24Vdc
Remoted shutdown	4	4	Input port. Used with external power supply. If connected to power supply, UPS transfer to bypass. UPS shutdown if bypass is abnormal
Common connection	5	1	Common connection of output signal. Connected to power supply for input signal. Shown as *Fig 5-2*.
Bypass mode	6	8	Closed to common connection: UPS is working in bypass mode Opened: UPS is not working in bypass mode
Battery low	7	6	Opened from common connection: battery low alarm Closed: battery capactiy is normal or not in battery mode
Normal	8	5	Closed from common connection: UPS is working in normal

mode			mode.
Utility failure	9	3	Opened form common connection: utility input is failure

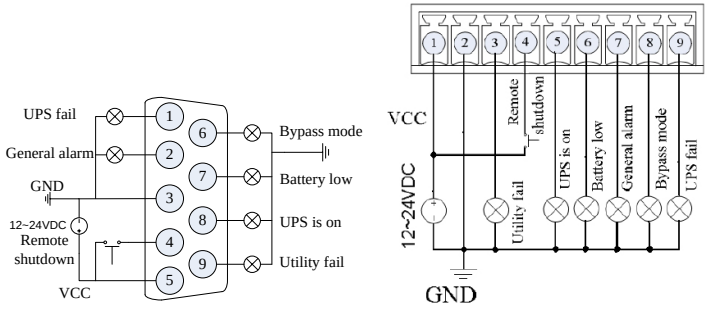

Fig 5- 2: Connect to External Power Supply

5.3 EPO（Default doesn't work）

The remoted EPO is located on the rear panel of UPS shown as Fig 1-2. It’s normal closed, if it’s opened, it will acivate EPO function, the UPS will be shutdown.

NOTE: The system default EPO doesn't work, if you want to use this feature, need to set the background software function.

5.4 RS485

RS485 is optional funciton for user to integrated monitoring and communication. RS485,SNMP and dry contact are installed in one intelligent slot.

6. Maintenance

This chapter includes battery maintenance, battery disposal and replacement, check UPS status and function.

6.1 Battery Maintenance

The UPS only requires minimal maintenance. The batteries used for standard models are value regulated, sealed lead-acid, maintenance free battery. When being connected to the utility power, whether the UPS is turned on or not, the UPS keeps charging the batteries and also offers the protective function of overcharging and over-discharging.

- The UPS should be charged once every 4 to 6 months if it has not been used for a long time.
- In the regions of hot climates, the battery should be charged and discharged every 2 months. The standard charging time should be at least 12 hours.
- Under normal conditions, the battery life lasts 3 to 5 years. In case if the battery is found in bad condition, earlier replacement should be made.
- Battery replacement should be performed by qualified personnel.
- Replace batteries with the same number and same type of batteries.
- Do not replace the battery individually. All the batteries should be replaced at the same time following the instructions of the battery supplier.

6.2 Battery Disposal

1) Before disposing of batteries, remove jewelry, watches and other metal objects.
2) Use rubber gloves and boots, use tools with insulated handles.
3) If it is necessary to replace any connection cables, please purchase the original materials from the authorized distributors or service centers, so as to avoid overheat or spark resulting in fire due to insufficient capacity.
4) Do not dispose of batteries or battery packs in a fire. The batteries may explode.
5) Do not open or mutilate batteries, released electrolyte is highly poisonous and harmful to the skin and eyes.
6) Do not short the positive and negative of the battery electrode, otherwise, it may result in electric shock or fire.
7) Make sure that there is no voltage before touching the batteries. The battery circuit is not isolated from the input potential circuit. There may be hazardous voltage between the battery terminals and the ground.
8) Even though the input breaker is disconnected, the components inside the UPS are still connected with the batteries, and there are potential hazardous voltages. Therefore, before any maintenance and repairs work is carried out, switch off the breaker of the battery pack or disconnect the jumper wire of connecting between the batteries.
9) Batteries contain hazardous voltage and current. Battery maintenance such as the battery replacement must be carried out by qualified personnel who are knowledgeable about batteries. No other persons should handle the batteries

6.3 Battery Replacement Procedures

1) Press ON/OFF button to transfer to bypass mode
2) Close the manual bypass breaker
3) Remove both side covers from the UPS.
4) Disconnect the battery wires one by one.
5) Remove metal bars which are used to fasten batteries.
6) Replace batteries one by one.
7) Screw metal bars back to UPS.
8) Connect the battery wires one by one. Take care of electrical shock while connecting the last wire.

6.4 Precaution

Although the UPS has been designed and manufactured to ensure personal safety, improper use can result in electrical shock or fire. To ensure safety, observe the following precautions:

- Turn off the UPS before cleaning it
- Clean the UPS with a dry cloth. Do not use liquid or aerosol cleaners
- Never block or insert any objects into the ventilation holes or other openings of the UPS

6.5 Checking UPS status

It is recommended to check the UPS once every half year.

Check if the UPS is faulty: Are the LED indicators abnormal? Is there any alarm?

Check if the UPS is working in bypass mode: Normally, the UPS works in normal mode, if it's working in bypass mode, please check: overload, internal fault and so on.

Check if the battery is discharging: When the mains input is normal, the battery should not discharge, if the UPS is working in battery mode, please check: if mains input is failure, battery test, operator intervention and so on.

7. Trouble Shooting

This chapter describes checking the UPS's status. This section also indicates various UPS symptoms a user may encounter and provides a troubleshooting guide in the event the UPS develops a problem. Use the following information to determine whether external factors caused the problem and how to remedy the situation.

If UPS alarms and buzzer sound, please press "FUNC" to get alarm code on the menu of alarm code(page⚠) on LCD. **And press "FUNC" for 2.5s when at page 4 to manually fault clear.** If alarms is still existent, please check the problem follow the *Table 7-1*:

Code	Cause	Solution
7	no battery	● Check if the battery cables are connected correctly ● Check battery breaker or fuses are opened ● Check if batteries are damaged
8	Manual bypass on	Manual bypass is closed, the UPS will transfer to bypass and forbidden to transfer back to inverter
10	EPO	● Check if EPO is closed correctly ● Check if EPO is activated manually
16	Utility abnormal	UPS mains input is abnormal. ● Check if mains input is normal ● Check if mains input voltage and frequency is over the working range ● Check if mains input breaker or external input breaker is opened ● Check if the input phase sequence against Please recover mains input power, otherwise output will be shutdown if battery is discharged to EOD
20	Bypass abnormal	● Check if bypass input power is abnormal ● Check if bypass input breaker is opened Please recover bypass input power, otherwise there will be no backup circuit when UPS is faulty
22	Bypass faulty	Bypass SCR is opened or shorted, please contact with local dealer
24	Bypass overload	Check the load and remove some non critical load until the load is below 95%
26	Bypass overload timeout	Bypass overload and timeout, UPS will shutdown output
28	Over synchronization	Bypass voltage or frequency is over tracking range. There could be interruption if manually transfer to bypass or inverter is faulty
30	Over transfer times	Mains and battery or inverter and bypass transfer for 5 times in 1hour
32	Output shorted	Load is abnormal or output breaker is shorted. ● Check if load is abnormal and the faulty load is shutdown

		● Check if output breaker is faulty If the faulty load is removed, please manually fault clear to restart UPS.
47	Rectifier fault	DC bus over voltage, low voltage, shorted or IGBT opened. Please manually clear the fault and if the fault is still on, please contact with local dealer
49	Inverter fault	Inverter voltage is abnormal, or inverter IGBT opened. Please manually clear the fault and fi the fault is still on, please contact with local dealer
51	Rectifier over temperature	Rectifier heatsink is over temperature or the temp sensor is not connected correctly. ● Check if fans are working normally ● Check if any thing block ventilation ● Check if the sensor is connected correctly ● Check if the environmental temp is over the range of UPS
53	Fan fault	One or more fans are faulty or blocked Check if all fans working normally Check if something blocks fan
55	Overload	Inverter is overload. Please remove numbers of non critical loads, or else UPS could transfer to bypass
57	Over load timeout	UPS will transfer to bypass and if bypass overload, output could be shutdown caused by bypass overload timeout. Please remove numbers of loads and the UPS will transfer back to inverter
59	Inverter over temperature	Inverter heat sink is over temperature or the temp sensor is not connected correctly. Check if fans are working normally Check if any thin block ventilation Check if the sensor is connected correctly Check if the environmental temp is over the range of UPS
63	Manual transfer to bypass	If bypass is over synchronization range, output could be interrupted if manually transfer to bypass
65	Battery low	Remained battery capacity is low when in battery mode
67	Battery reversed	Check if battery cables are connected correctly Check if inverter cables of battery packs are connected correctly
69	Inverter protect	Inverter voltage abnormal or DC bus is over voltage. UPS will fault clear automatically. If not, please contact with local dealer
78	Parallel cables error	Check if all parallel communication cables are connected correctly
81	Charger fail	Charger is faulty or is not disconnected. Please contact with local dealer
119	Relay opened	Inverter relay is opened. Please contact with local dealer
121	Relay closed	Inverter relay is closed. Please contact with local dealer

Annex A. Parallel Setting

1. Connect UPS1 with RS232 cable to PC. Connect UPS with monitoring software.
2. Enter in menu "**ServSetting**", set System Mode as "**Parallel**" in the menu "**System Setting**".
3. Set **United Number** as "2", set **System ID** as "0". Press "set" to confirm setting.

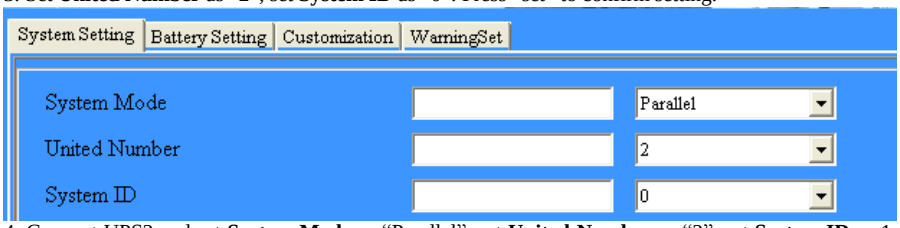

4. Connect UPS2 and set **System Mode** as "Parallel", set **United Number** as "2", set **System ID** as 1. Press "set" to confirm setting.

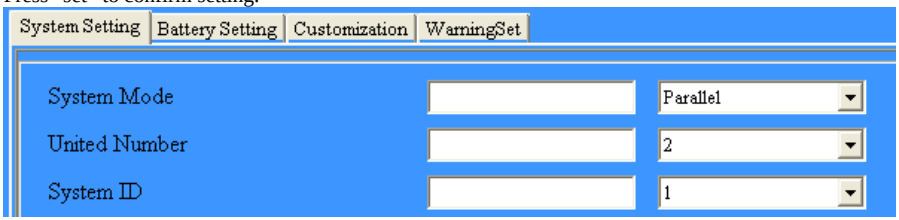

If there are 3 UPS are paralleled, set the **United Number** as "3".

5. Connect UPS3 and set **System Mode** as "**Parallel**", set **United Number** as "3", set **System ID** as 2.

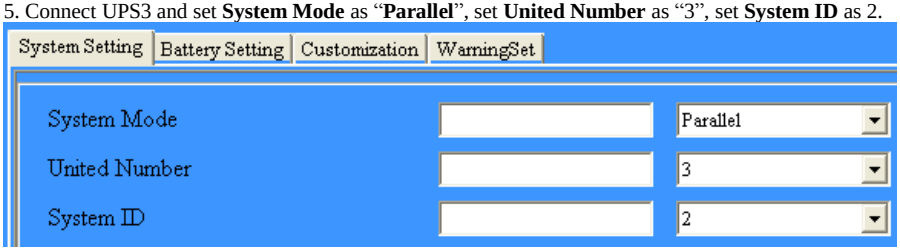

Annex B. Mechanical Size

1.6kVA/10kVA long backup model

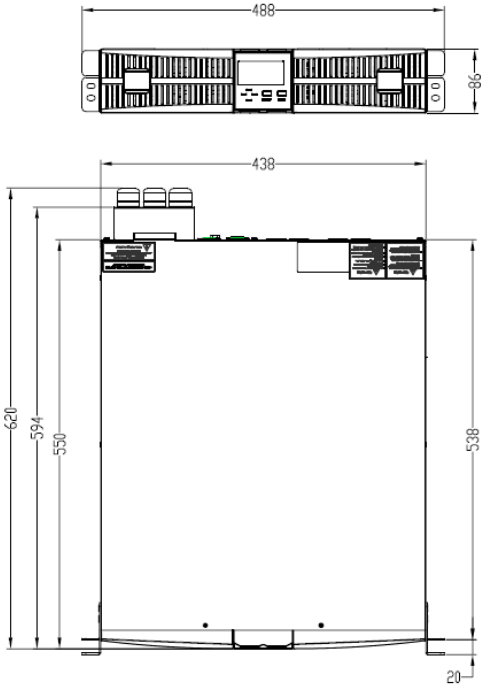

2.6kVA/10kVA standard model

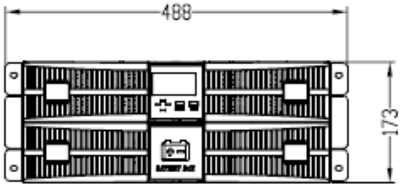

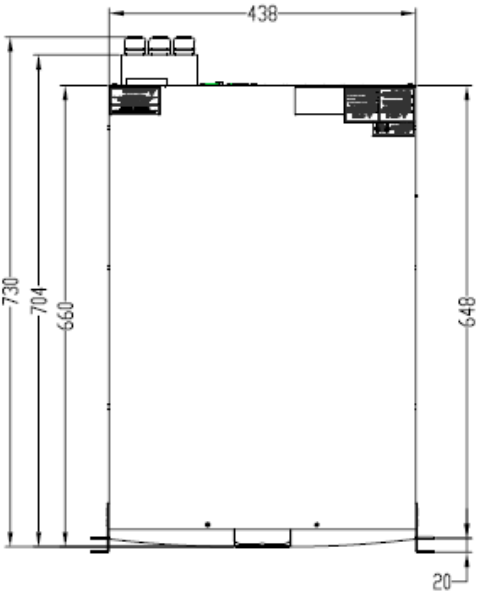

Annex C. Battery Assembly

1.Put the batteries together and connect the cables as the following figure:

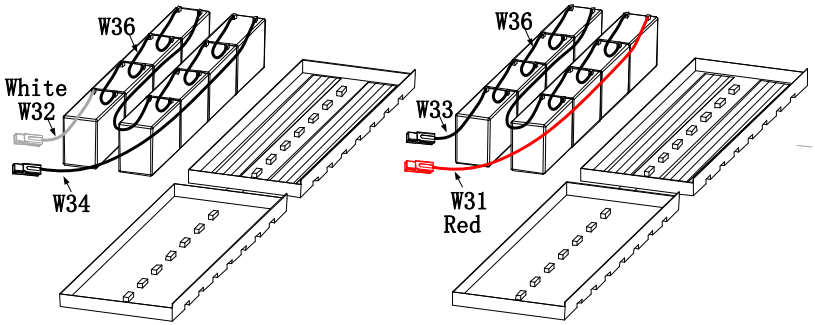

2.Put the batteries into the transparent box, stick firmly：

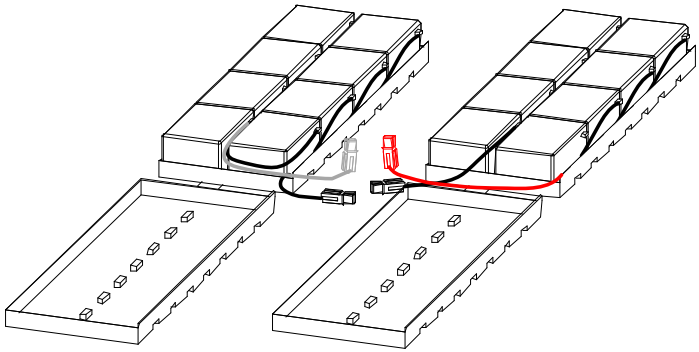

3.Cover, stick firmly：

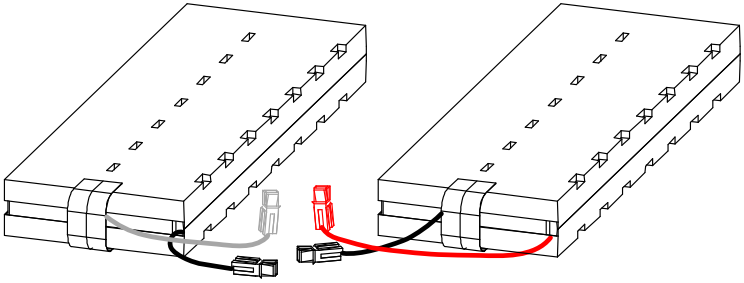

4.Insert two battery packs into UPS as below, notice that the location of two packs with different connectors:

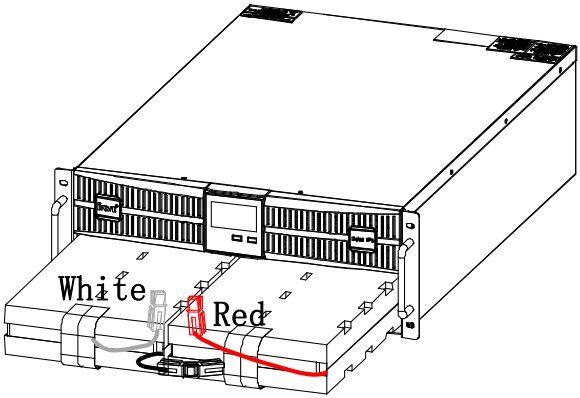

5. Connect connectors of UPS and battery packs, red to red, white to white. Cover back the front panel

Annex D. Battery Run Time

Standard battery pack includes 16 blocks 9AH batteries. Please refer to the table below for the battery runtime to configure battery packs.

Pack’s number	UPS	Backup Time (mins)									
		1KW	2KW	3KW	4KW	5KW	6KW	7KW	8KW	9KW	10KW
1	6k	60	25	16	10	6	/	/	/	/	/
	10k	60	25	16	10	6	/	/	/	/	/
2	6k	180	60	30	24	20	16	/	/	/	/
	10k	180	60	30	24	20	16	13	10	8	7
3	6k	240	120	60	40	28	23	/	/	/	/
	10k	240	120	60	40	28	23	20	18	16	15
4	6k	360	180	110	60	42	30	/	/	/	/
	10k	360	180	110	60	42	30	26	23	21	20
5	6k	480	210	150	90	60	46				
	10k	480	210	150	90	60	46	37	28	25	22

NOTICE: Backup time of batteries is depending on other facts such as battery brand, working temperature, working time and so on, the table is calculated according to ideal situation.
NOTICE: Set charger current according to battery capacity, the charger current should not be larger than 0.2C, normally the charger current is set as 0.1C. Too large charger current could damage the batteries.

Recycling information in accordance with the WEEE

The product is marked with the wheelie bin symbol. It indicates that at the end of life the product should enter the recycling system.

You should dispose of it separately at an appropriate collection point and not place it in the normal waste stream.

The figure below shows the wheelie bin symbol indicating separate collection for electrical and electronic equipment (EEE).

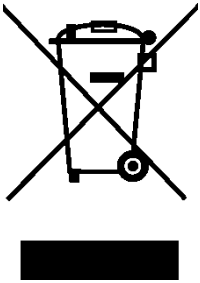

The Horizontal bar underneath the crossed-out wheelie bin indicates that the equipment has been manufactured after the Directive came into force in 2005.

The main parts of the drive can be recycled to preserve natural resources and energy. Product parts and materials should be dismantled and separated.

Contact your local distributor for further information on environmental aspects. End of life treatment must follow international and national regulations.